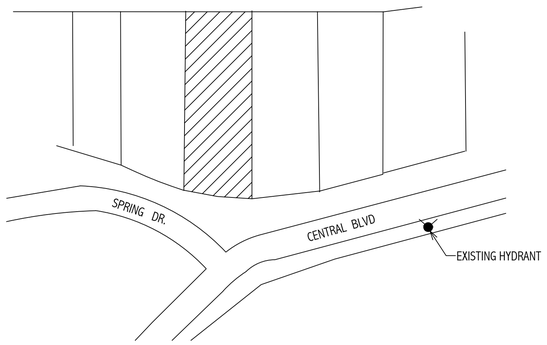

HYDRANT LOCATION

BUILDING CONSTRUCTION STANDARDS FOR FIRE PROTECTION

The following building construction standards pertain to two categories of structures. Category I structures shall be defined as those structures located on development sites where maximum built-in fire protection measures are necessary due to nearby steep slopes or wildland fuel loading. These buildings will exceed the minimum . California Fire Safe Guidelines. Category II structures shall be defined as those structures located in the balance of the urban/wildland interface. These structures will meet the minimum California Fire Safe Guidelines.

The Fire Department will designate which sites or lots should comply with the Category I or Category II building construction standards. Developers may also be required to obtain, at their expense, a qualified urban/wildland fire management consultant to assist in this designation. .

Construction standards followed by the notation "(I)" apply to Category I structures only. Construction standards followed by the notation "(I & II)" apply to both Category I and II structures.

1. Design roofs that will comply with a · ClassA" non-combustible roof rating as outlined in State Building Code Section 3204, 1991 edition. (Do not use wood shake or treated wood shake roofs.) (I & II)

2. Construct exterior decks with heavy timber or non-combustible materials, and enclose all sides with a one-hour fire-resistive rated material. (I & II)

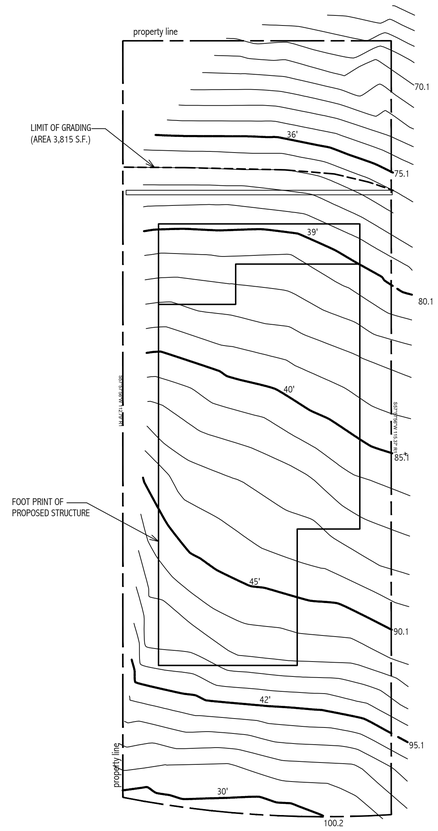

SLOPE FORMULA $S = \frac{I \times L \times 100}{A}$

WHERE

S = AVERAGE EXISTING SLOPE IN PERCENT FOR THE PORTION OF THE SITE OR LOT TO BE DEVELOPED.

I = CONTOUR INTERVAL IN FEET.

L = THE COMBINED LENGTH IN FEET OF ALL CONTOUR LINES WITHIN THE PORTION OF THE SITE OR LOT TO BE DEVELOPED.

A = TOTAL AREA IN SQUARE FEET OF THE PORTION OF THE SITE OR LOT TO BE DEVELOPED.

$$S = \frac{5 \times (30+42+45+40+39+36) \times 100}{3{,}815} = \frac{116{,}000}{3{,}815} = 30.4\%$$ AVERAGE EXISTING SLOPE

ABBREVIATIONS

A.F.F.	- ABOVE FINISH FLOOR	MIN.	- MINIMUM
CONC.	- CONCRETE	(N)	- NEW
D.F.	- DOUGLAS FIR	O.C.	- ON CENTER
(D)	- DEMO.	P.T.	- PRESSURE TREATED
(E)	- EXISTING	S.H.	- SINGLE HUNG WINDOW
EA.	- EACH	SHT.	- SHEET
E.N.	- EDGE NAILING	SQ.	- SQUARE
FT.	- FOOT OR FEET	T & G	- TONGUE AND GROOVE
GA	- GAUGE	TYP.	- TYPICAL
MAX.	- MAXIMUM	Ø	- DIAMETER
BM	- BEAM	RFTR	- RAFTER

LEGEND

STUD SIZE(S).

WINDOW

SLIDER DOOR

VICINITY MAP

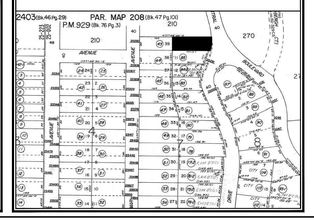

NOTES:

- ALL CONNECTIONS FROM EXISTING WATER MAINS SHALL BE PERFORMED BY CITY WATER DISTRIBUTION PERSONNEL AT THE APPLICANT'S OR OWNER'S EXPENSE.
- WATER METERS MUST BE LOCATED A MINIMUM OF TWO FEET FROM TOP OF THE DRIVEWAY FLARES AS PER CITY STANDARD DETAIL 213 THRU 218.
- WATER MAINS AND SERVICES, INCLUDING THE METERS, MUST BE LOCATED "AT LEAST 10 FEET HORIZONTALLY FROM AND ONE FOOT VERTICALLY ABOVE, ANY PARALLEL PIPELINE CONVEYING UNTREATED SEWAGE, " (SUCH AS A SANITARY SEWER LATERAL) PER THE CURRENT CALIFORNIA WATERWORKS STANDARDS, TITLE 22, CHAPTER 16, SECTION 64572.
- IF THE PROPERTY WILL HAVE MORE THAN 5,000 SQUARE FEET OF IRRIGATED LANDSCAPE, A SEPARATE IRRIGATION WATER METER MUST BE INSTALLED. IRRIGATION WATER METER MUST BE INSTALLED. IRRIGATION WATER METERS MUST BE PROTECTED BY A REDUCE-PRESSURE BACKFLOW PREVENTION ASSEMBLY, PER SD-202.

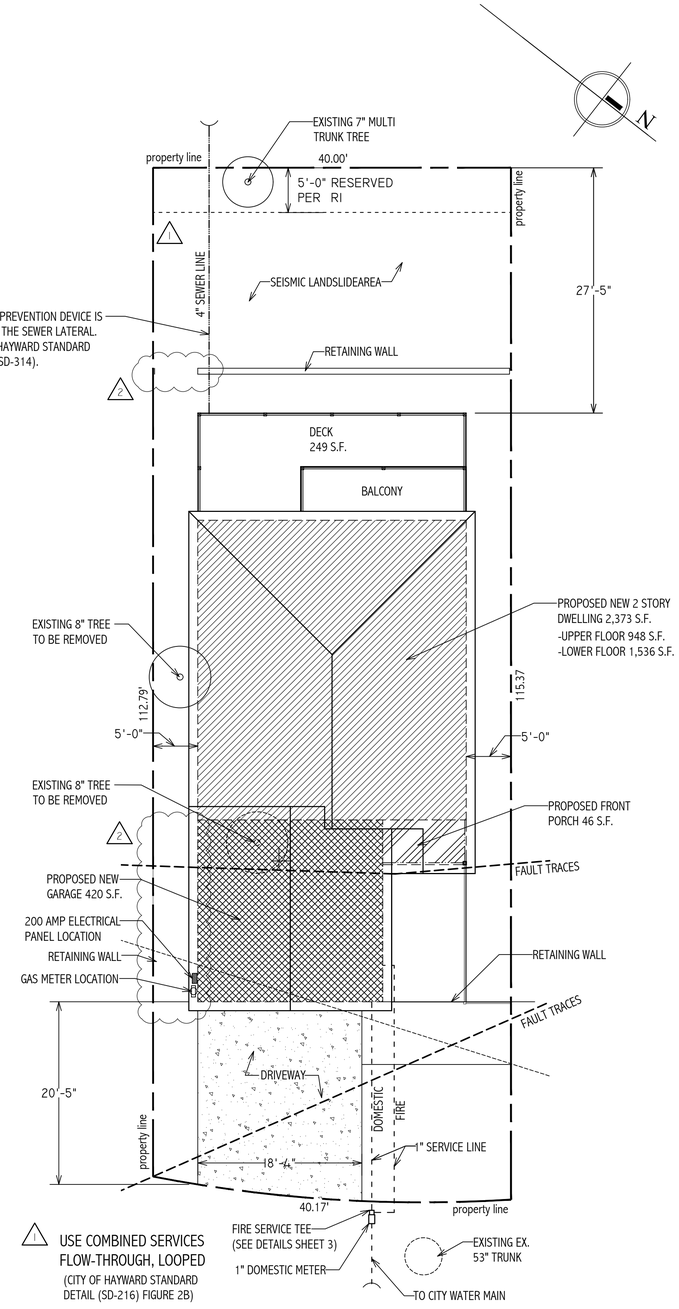

USE COMBINED SERVICES FLOW-THROUGH, LOOPED
(CITY OF HAYWARD STANDARD DETAIL (SD-216) FIGURE 2B)

25183 CENTRAL BLVD.

SITE PLAN .

SCALE 1/8"= 1'-0"

PROJECT DATA

A.P.N # ..... 445 - 220 - 86
OCCUPANCY GROUP R-3/U (2-STORY)
CONSTRUCTION TYPE ..... V-B
ZONING ..... RS RI

THE NEW STRUCTURE WILL HAVE A DEFERRED SUBMITTAL FOR AUTOMATIC FIRE SPRINKLER SYSTEM CONFORMING TO NFPA 13D

APPLICABLE CODES

CALIFORNIA BUILDING CODE (CBC).....2019
CALIFORNIA ELECTRICAL CODE (CEC).....2019
CALIFORNIA MECHANICAL CODE (CMC).....2019
CALIFORNIA PLUMBING CODE (CPC).....2019
CALIFORNIA ENERGY CODE 2019
CALIFORNIA FIRE CODE (CFC).....2019
CALIFORNIA RESIDENTIAL CODE (CRC).....2019

SCOPE OF WORK

- PROPOSED NEW 2 STORY DWELLING
  - UPPER FLOOR WITH:
    KITCHEN, NOOK AREA, FAMILY ROOM, LIVING ROOM, GUEST ROOM, BATHROOM, GARAGE, PORCH & DECK.
  - LOWER FLOOR WITH:
    MASTER BEDROOM, MASTER BATHROOM, TWO BEDROOMS, TWO BATHROOMS, LAUNDRY & DECK.

SITE AREA

A) LOT SIZE	4,597 SQ. FT.
B) UPPER FLOOR	948 SQ. FT.
C) LOWER FLOOR	1,536 SQ. FT.
D) GARAGE	420 SQ. FT.
E) FRONT PORCH	46 S.F.
F) REAR DECK	249 S.F.
LOT COVERAGE (C+E+F)	1,831 SQ. FT. 39%
F.A.R. (B+C)	2,484 SQ. FT. 54%

DRAWING INDEX

A1	• SITE PLAN
A2	• PROPOSED LOWER FLOOR PLAN
A3	• PROPOSED UPPER FLOOR PLAN
A4	• ELEVATIONS
A5	• ELEVATIONS
C1	• GRADING & DRAINAGE PLAN
C2	• GRADING & DRAINAGE PLAN
C3	• GRADING & DRAINAGE PLAN
C4	• GRADING & DRAINAGE PLAN
BT1	• BOUNDARY & TOPOGRAPHIC SURVEY
BT2	• BOUNDARY & TOPOGRAPHIC SURVEY
L1	• EXISTING TREE PLAN
L2	• LANDSCAPE PLAN
L3	• IRRIGATION PLAN
L4	• DRAINAGE PLAN
L5	• DETAILS

NO.	REVISION	DATE	BY	ISSUED FOR
1	P.C. COMMENTS	5/4/20	GP	
2	P.C. COMMENTS	2/17/21	GP	
3				
4				
5				

PROPOSED
NEW DWELLING

OWNER: PEDRO DIAZ RESIDENCE
25183 CENTRAL BLVD.
HAYWARD, CA 94541

Guillermo Prado

RESIDENTIAL DESIGNS
829 S. 7th Street • San Jose, CA 95112
Phone: (408) 292-3800 • (408) 274-3069
gpresidential@gmail.com

Date	1/20/20
Scale	AS NOTED
Drawn	AP
Job	
Sheet	A-1

24x36 SHEET-PLOT 1=1

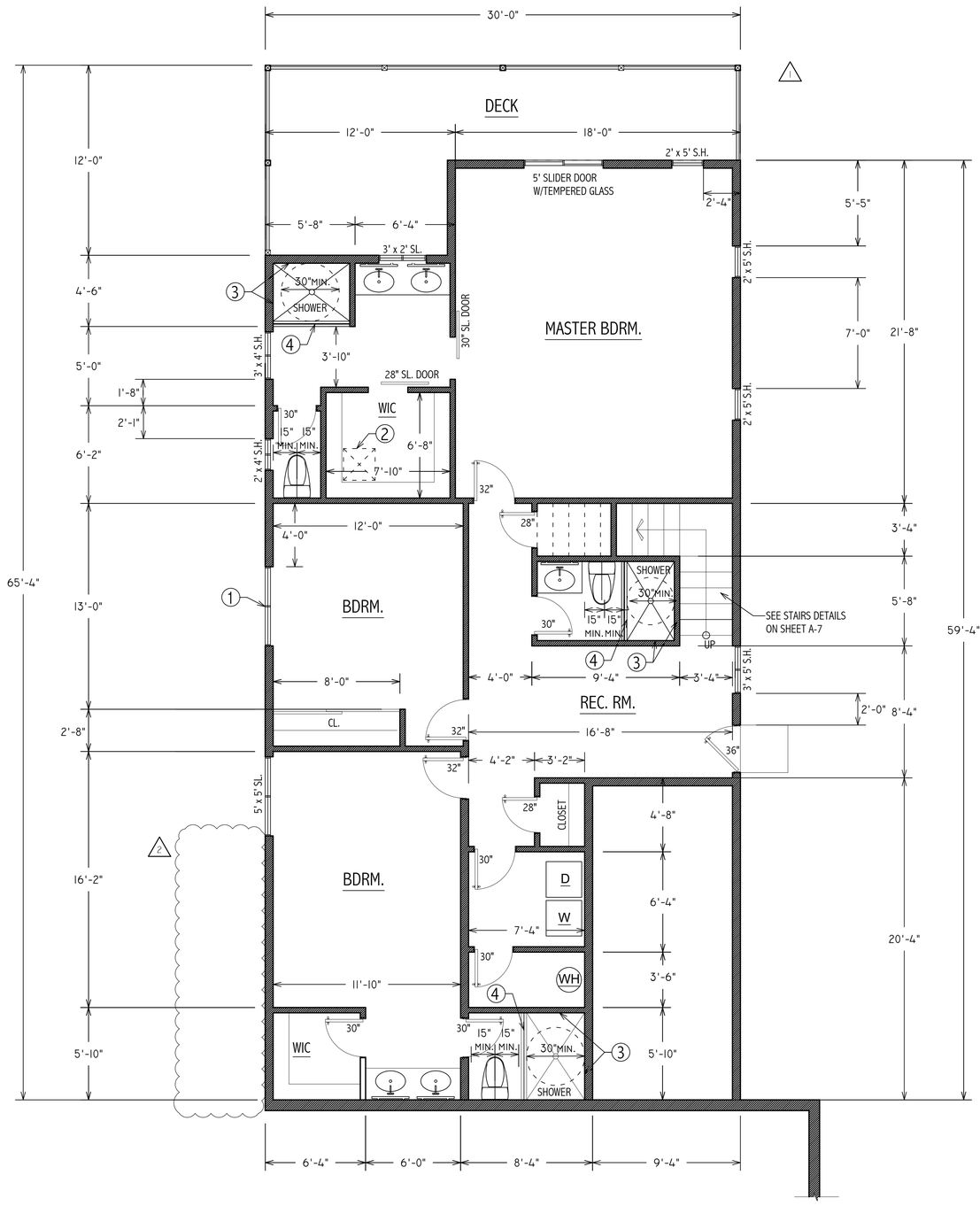

PROPOSED LOWER FLOOR

SCALE: 1/4"= 1'-0"

NOTES

1. PROVIDE NEW 5' X 5' DOUBLE GLAZED LOW-E WINDOW (SL.) WITH 4" X 12" D.F. # 2 HEADER
2. 24" X 24" CRAWL SPACE ACCESS DOOR
3. THE WALLS OF THE SHOWER AREAS MUST BE CERAMIC TILE.
   MATERIALS USED AS BACKERS FOR WALL TILE IN TUB AND SHOWER AREAS AND WALL PANELS IN SHOWER AREAS SHALL BE:
   1. GLASS MAT GYPSUM PANEL
   2. FIBER-REINFORCED GYPSUM PANELS
   3. NON-ASBESTOS FIBER-CEMENT BACKER BOARD
   4. NON-ASBESTOS FIBER-CEMENT REINFORCED CEMENTITIOUS BACKER UNITS INSTALLED IN ACCORDANCE WITH MANUFACTURERS' RECOMMENDATIONS (R702.4.2)
4. SHOWER DOOR OPENING TO BE 22" MINIMUM PER CPC 408.5. (PROVIDE TEMPERED GLASS)

GENERAL NOTES

1. ALL EMERGENCY ESCAPE AND RESCUE OPENING SHALL HAVE A MINIMUM NET CLEAR OPENING OF 5.7 SQUARE FEET (1.530 m2) PER CRC R310.1.1
   THE MINIMUM NET CLEAR OPENING HEIGHT SHALL BE 24 INCHES (610 mm) PER CRC R310.1.2
   THE MINIMUM NET CLEAR OPENING WIDTH SHALL BE 20 INCHES (508 mm) PER CRC R310.1.3
   EMERGENCY ESCAPE AND RESCUE OPENINGS SHALL BE MAINTAINED FREE OF ANY OBSTRUCTIONS OTHER THAN THOSE ALLOWED BY THIS SECTION AND SHALL BE OPERATIONAL FROM THE INSIDE OF THE ROOM WITHOUT THE USE OF KEYS, TOOLS OR SPECIAL KNOWLEDGE PER CRC R310.1.4
2. SMOKE ALARMS SHALL RECEIVE THEIR PRIMARY POWER FROM THE BUILDING WIRING PROVIDED THAT SUCH WIRING IS SERVED FROM A COMMERCIAL SOURCE AND SHALL BE EQUIPPED WITH A BATTERY BACKUP, PER CRC R314.4
   SMOKE ALARMS SHALL BE INSTALLED IN THE FOLLOWING LOCATIONS PER CRC R314.3 :
   a) IN EACH SLEEPING ROOM.
   b) OUTSIDE EACH SEPARATE SLEEPING AREA IN THE IMMEDIATE VICINITY OF THE BEDROOMS.
   c) ON EACH ADDITIONAL STORY OF THE DWELLING, INCLUDING BASEMENTS AND HABITABLE ATTICS BUT NOT INCLUDING CRAWL SPACES AND UNINHABITABLE ATTICS.
3. BATHTUB AND SHOWER FLOORS AND WALLS ABOVE BATHTUBS WITH INSTALLED SHOWER HEADS AND IN SHOWER COMPARTMENTS SHALL BE FINISHED WITH A NONABSORBENT SURFACE. SUCH WALL SURFACES SHALL EXTEND TO A HEIGHT OF NOT LESS THAN 6 FEET (1829 mm) ABOVE THE FLOOR, PER CRC R307.2
4. R308.4 HAZARDOUS LOCATIONS FOR THE PURPOSES OF GLAZING. GLAZING IN DOORS. GLAZING IN ALL FIXED AND OPERABLE PANELS OF SWINGING, SLIDING AND BIFOLD DOORS SHALL BE CONSIDERED A HAZARDOUS LOCATION PER CRC R308.4.1
   GLAZING ADJACENT DOORS. GLAZING IN AN INDIVIDUAL FIXED OR OPERABLE PANEL ADJACENT TO A DOOR WHERE THE NEAREST VERTICAL EDGE OF THE GLAZING IS WITHIN A 24-INCH (610 mm) ARC OF EITHER VERTICAL EDGE OF THE DOOR IN A CLOSED POSITION AND WHERE THE BOTTOM EXPOSED EDGE OF THE GLAZING IS LESS THAN 60 INCHES (1524 mm) ABOVE THE FLOOR OR WALKING SURFACE SHALL BE CONSIDERED A HAZARDOUS LOCATION, PER CRC R308.4.2
   GLAZING IN WINDOWS. GLAZING IN AN INDIVIDUAL FIXED OR OPERABLE PANEL THAT MEETS ALL OF THE FOLLOWING CONDITIONS SHALL BE CONSIDERED A HAZARDOUS LOCATION PER CRC R308.4.3
   a) THE EXPOSED AREA OF AN INDIVIDUAL PANE IS LARGER THAN 9 SQUARE FEET (0.836 m2)
   b) THE BOTTOM EDGE OF THE GLAZING IS LESS THAN 18 INCHES (457 mm) ABOVE THE FLOOR.
   c) THE TOP EDGE OF THE GLAZING IS MORE THAN 36 INCHES (914 mm) ABOVE THE FLOOR; AND
   d) ONE OR MORE WALKING SURFACE ARE WITHIN 36 INCHES (914 mm), MEASURED HORIZONTALLY AND IN A STRAIGHT LINE, OF THE GLAZING, PER CRC R308.4.3
   GLAZING AND WET SURFACES. GLAZING IN WALLS, ENCLOSURES OR FENCES CONTAINING OR FACING HOT TUBS, SPAS, WHIRLPOOLS, SAUNAS, STEAM ROOMS, BATHTUBS, SHOWERS AND INDOOR OR OUTDOOR SWIMMING POOLS WHERE THE BOTTOM EXPOSED EDGE OF THE GLAZING IS LESS THAN 60 INCHES (1524 mm) MEASURED VERTICALLY ABOVE ANY STANDING OR WALKING SURFACE SHALL BE CONSIDERED A HAZARDOUS LOCATION. THIS SHALL APPLY TO SINGLE GLAZING AND ALL PANES IN MULTIPLE GLAZING, PER CRC R308.4.5
5. GLAZING ADJACENT STAIRS AND RAMPS. GLAZING WHERE THE BOTTOM EXPOSED EDGE OF THE GLAZING IS LESS THAN 36 INCHES (914 mm) ABOVE THE PLANE OF THE ADJACENT WALKING SURFACE OF STAIRWAYS, LANDINGS BETWEEN FLIGHTS OF STAIRS AND RAMPS SHALL BE CONSIDERED A HAZARDOUS LOCATION, PER CRC R308.4.6

NO.	REVISION	DATE	BY	ISSUED FOR
1	P.C. COMMENTS	5/4/20	GP	
2	P.C. COMMENTS	2/17/21	GP	
3				
4				
5				

PROPOSED
NEW DWELLING

OWNER: PEDRO DIAZ RESIDENCE
25183 CENTRAL BLVD.
HAYWARD, CA 94541

Guillermo Prado

RESIDENTIAL DESIGNS
829 S. 7th Street • San Jose, CA 95112
Phone: (408) 292-3800 • (408) 274-3069
gpresidential@gmail.com

Date	1/20/20
Scale	AS NOTED
Drawn	AP
Job	
Sheet	A-2

24x36 SHEET-PLOT 1=1

"FP8K-DX" AUTO LIFT CAR-PACK-8 BASIC STORAGE LIFT 8 lb 4 POST PARKING.

LIFT SPECIFICATIONS

Specifications	FP8K-B / FP8K-DX	FP8K-DX-XLT
Lifting Capacity	8,000 lbs.	8,000 lbs.
Lifting Height	74.8"	82.3"
Overall Length w/ Ramps	207.3"	222.5"
Overall Length/ No Ramps	175.5"	190.7"
Overall Width	103.5"	109.4"
Runway Tread Width	18.7"	18.7"
Runway Length	165.5"	180.5"
Runway Height	4.3"	4.3"
Column Height	86"	94"
Clearance between Columns	94.4"	100.3"
Clearance between Runways	37.2	42.2"
Outside Runway to Outside Runway	74.8"	80.7"
Clearance Under Runways	70"	78"
Drive Thru Width	80"	87.2
Locking Positions	10	12
Base Plate Size	10" x 12"	10" x 12"
Power	115V-20 Amp / 1PH	115V-20 Amp / 1PH
Ship Weight	1,545 lbs. / 1,695 lbs.	1,805 lbs.

Note: The FP8K-B Lift model is the same Lift as the FP8K-DX, just without the Poly Caster Kit, Drip Trays & Jack Tray.

FLOOR PLAN LAYOUT

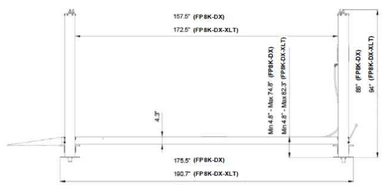

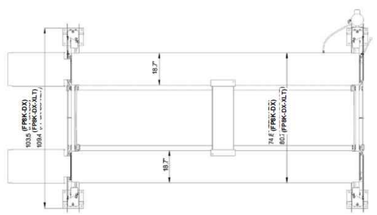

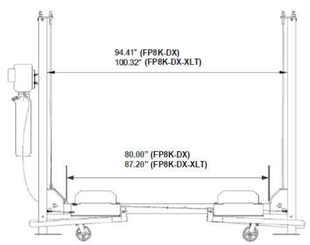

MAIN COMPONENTS IDENTIFICATION

FP8K-DX & FP8K-DX-XLT

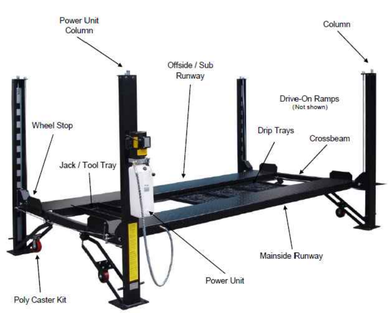

Note: The FP8K-B Lift model is the same Lift as the FP8K-DX, just without the Poly Caster Kit, Drip Trays & Jack Tray.

OPTIONAL ACCESSORIES NOT SHOWN:

- SJ-35 Sliding Scissor Jack – 3,500 lbs. capacity
- Aluminum Drive-On Ramps
- 90 Degree Power Unit Bracket Kit (only to the rear of Mainside Column for FP8K Lifts)

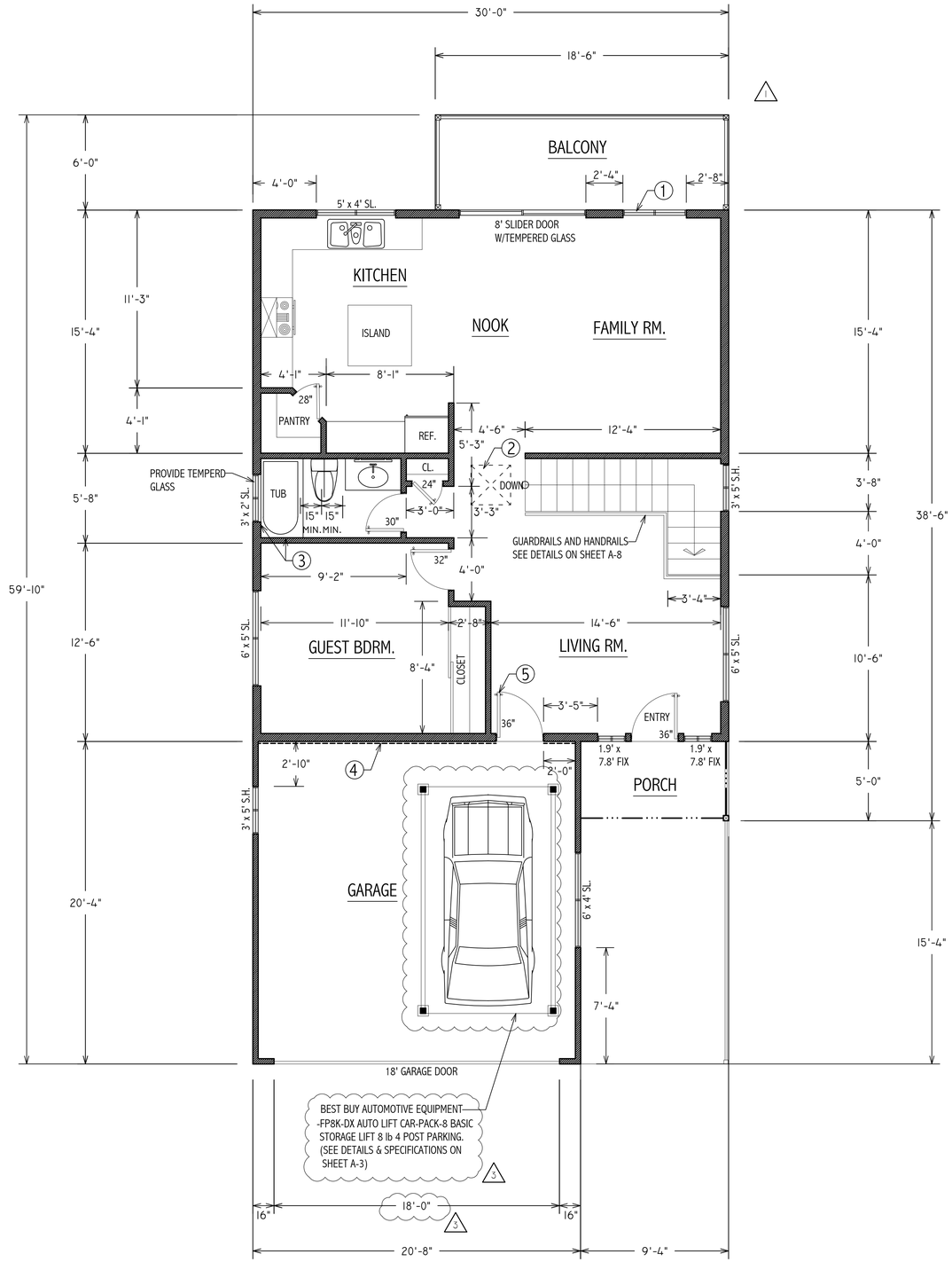

PROPOSED UPPER FLOOR

SCALE: 1/4"= 1'-0"

NOTES

1. PROVIDE NEW 6' X 5' DOUBLE GLAZED LOW-E WINDOW (SL.) WITH 4" X 12" D.F. # 2 HEADER
2. 30" X 30" ATTIC ACCESS DOOR. (30" MIN. CLEAR HEADROOM ABOVE ACCESS OPENING. CRC SECTION R807.1)
3. THE WALLS OF THE SHOWER AREAS MUST BE CERAMIC TILE.
   MATERIALS USED AS BACKERS FOR WALL TILE IN TUB AND SHOWER AREAS AND WALL PANELS IN SHOWER AREAS SHALL BE:
   1. GLASS MAT GYPSUM PANEL
   2. FIBER-REINFORCED GYPSUM PANELS
   3. NON-ASBESTOS FIBER-CEMENT BACKER BOARD
   4. NON-ASBESTOS FIBER-CEMENT REINFORCED CEMENTITIOUS BACKER UNITS INSTALLED IN ACCORDANCE WITH MANUFACTURERS' RECOMMENDATIONS (R702.4.2)
4. PROVIDE NOT LESS THAN 5/8" TYPE-X GYPSUM BOARD OR EQUIVALENT APPLIED TO THE GARAGE SIDE. (CRC TABLE R302.6)
5. PROVIDE 36" DOOR 1-3/8" THICK SOLID CORE, MINIMUM 20 MINUTE RATED, SELF LATCHING AND WEATHER STRIPPED.

GENERAL NOTES

1. ALL EMERGENCY ESCAPE AND RESCUE OPENING SHALL HAVE A MINIMUM NET CLEAR OPENING OF 5.7 SQUARE FEET (1.530 m2) PER CRC R310.1.1
   THE MINIMUM NET CLEAR OPENING HEIGHT SHALL BE 24 INCHES (610 mm) PER CRC R310.1.2
   THE MINIMUM NET CLEAR OPENING WIDTH SHALL BE 20 INCHES (508 mm) PER CRC R310.1.3
   EMERGENCY ESCAPE AND RESCUE OPENINGS SHALL BE MAINTAINED FREE OF ANY OBSTRUCTIONS OTHER THAN THOSE ALLOWED BY THIS SECTION AND SHALL BE OPERATIONAL FROM THE INSIDE OF THE ROOM WITHOUT THE USE OF KEYS, TOOLS OR SPECIAL KNOWLEDGE PER CRC R310.1.4
2. SMOKE ALARMS SHALL RECEIVE THEIR PRIMARY POWER FROM THE BUILDING WIRING PROVIDED THAT SUCH WIRING IS SERVED FROM A COMMERCIAL SOURCE AND SHALL BE EQUIPPED WITH A BATTERY BACKUP, PER CRC R314.4
   SMOKE ALARMS SHALL BE INSTALLED IN THE FOLLOWING LOCATIONS PER CRC R314.3 :
   a) IN EACH SLEEPING ROOM.
   b) OUTSIDE EACH SEPARATE SLEEPING AREA IN THE IMMEDIATE VICINITY OF THE BEDROOMS.
   c) ON EACH ADDITIONAL STORY OF THE DWELLING, INCLUDING BASEMENTS AND HABITABLE ATTICS BUT NOT INCLUDING CRAWL SPACES AND UNINHABITABLE ATTICS.
3. BATHTUB AND SHOWER FLOORS AND WALLS ABOVE BATHTUBS WITH INSTALLED SHOWER HEADS AND IN SHOWER COMPARTMENTS SHALL BE FINISHED WITH A NONABSORBENT SURFACE. SUCH WALL SURFACES SHALL EXTEND TO A HEIGHT OF NOT LESS THAN 6 FEET (1829 mm) ABOVE THE FLOOR, PER CRC R307.2
4. R308.4 HAZARDOUS LOCATIONS FOR THE PURPOSES OF GLAZING.
   GLAZING IN DOORS. GLAZING IN ALL FIXED AND OPERABLE PANELS OF SWINGING, SLIDING AND BIFOLD DOORS SHALL BE CONSIDERED A HAZARDOUS LOCATION PER CRC R308.4.1
   GLAZING ADJACENT DOORS. GLAZING IN AN INDIVIDUAL FIXED OR OPERABLE PANEL ADJACENT TO A DOOR WHERE THE NEAREST VERTICAL EDGE OF THE GLAZING IS WITHIN A 24-INCH (610 mm) ARC OF EITHER VERTICAL EDGE OF THE DOOR IN A CLOSED POSITION AND WHERE THE BOTTOM EXPOSED EDGE OF THE GLAZING IS LESS THAN 60 INCHES (1524 mm) ABOVE THE FLOOR OR WALKING SURFACE SHALL BE CONSIDERED A HAZARDOUS LOCATION, PER CRC R308.4.2
   GLAZING IN WINDOWS. GLAZING IN AN INDIVIDUAL FIXED OR OPERABLE PANEL THAT MEETS ALL OF THE FOLLOWING CONDITIONS SHALL BE CONSIDERED A HAZARDOUS LOCATION PER CRC R308.4.3
   a) THE EXPOSED AREA OF AN INDIVIDUAL PANE IS LARGER THAN 9 SQUARE FEET (0.836 m2)
   b) THE BOTTOM EDGE OF THE GLAZING IS LESS THAN 18 INCHES (457 mm) ABOVE THE FLOOR.
   c) THE TOP EDGE OF THE GLAZING IS MORE THAN 36 INCHES (914 mm) ABOVE THE FLOOR; AND
   d) ONE OR MORE WALKING SURFACE ARE WITHIN 36 INCHES (914 mm), MEASURED HORIZONTALLY AND IN A STRAIGHT LINE, OF THE GLAZING, PER CRC R308.4.3
   GLAZING AND WET SURFACES. GLAZING IN WALLS, ENCLOSURES OR FENCES CONTAINING OR FACING HOT TUBS, SPAS, WHIRLPOOLS, SAUNAS, STEAM ROOMS, BATHTUBS, SHOWERS AND INDOOR OR OUTDOOR SWIMMING POOLS WHERE THE BOTTOM EXPOSED EDGE OF THE GLAZING IS LESS THAN 60 INCHES (1524 mm) MEASURED VERTICALLY ABOVE ANY STANDING OR WALKING SURFACE SHALL BE CONSIDERED A HAZARDOUS LOCATION. THIS SHALL APPLY TO SINGLE GLAZING AND ALL PANES IN MULTIPLE GLAZING, PER CRC R308.4.5
5. GLAZING ADJACENT STAIRS AND RAMPS. GLAZING WHERE THE BOTTOM EXPOSED EDGE OF THE GLAZING IS LESS THAN 36 INCHES (914 mm) ABOVE THE PLANE OF THE ADJACENT WALKING SURFACE OF STAIRWAYS, LANDINGS BETWEEN FLIGHTS OF STAIRS AND RAMPS SHALL BE CONSIDERED A HAZARDOUS LOCATION, PER CRC R308.4.6

NO.	REVISION	DATE	BY	ISSUED FOR
1	P.C. COMMENTS	5/4/20	GP	
2	P.C. COMMENTS	2/17/21	GP	
3	P.C. COMMENTS	5/27/21	GP	

PROPOSED
NEW DWELLING

OWNER: PEDRO DIAZ RESIDENCE
25183 CENTRAL BLVD.
HAYWARD, CA 94541

Guillermo Prado

GP RESIDENTIAL DESIGNS
829 S. 7th Street • San Jose, CA 95112
Phone: (408) 292-3800 • (408) 274-3069
gpresidential@gmail.com

Date	1/20/20
Scale	AS NOTED
Drawn	AP
Job	
Sheet	A-3

24x36 SHEET-PLOT 1=1

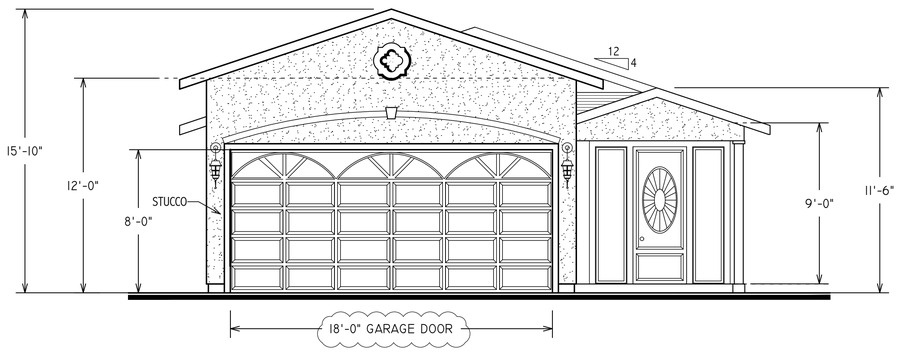

FRONT VIEW ELEVATION
SCALE 3/16"= 1'-0"

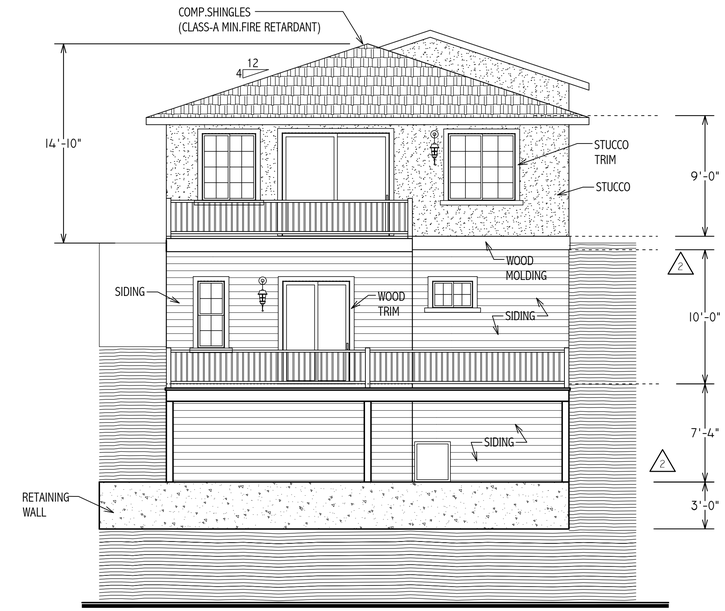

REAR VIEW ELEVATION
SCALE 3/16"= 1'-0"

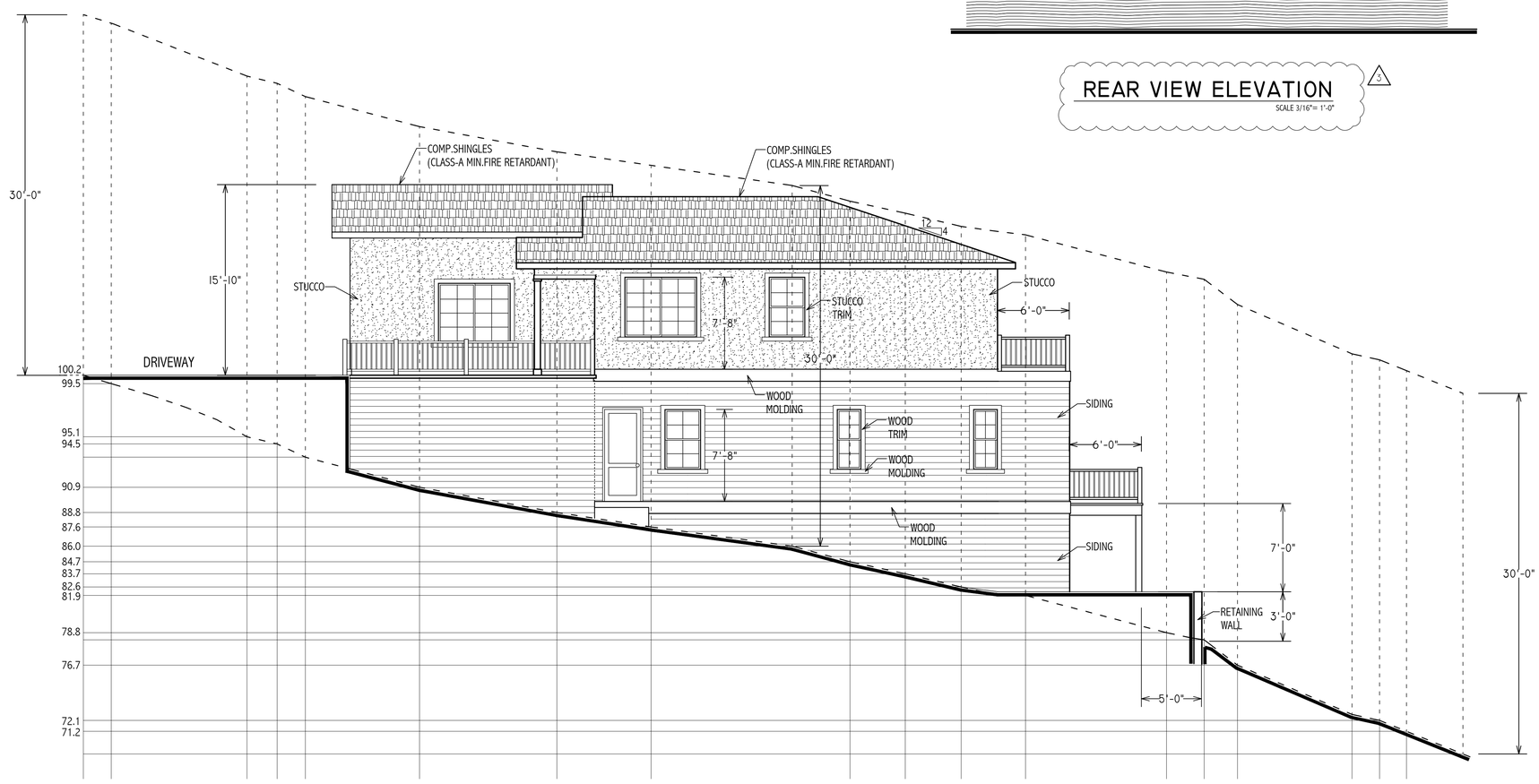

RIGHT VIEW ELEVATION
SCALE 3/16"= 1'-0"

NO.	REVISION	DATE	BY	ISSUED FOR
1				
2				
3	P.C. COMMENTS	5/27/2	GP	
4				
5				

PROPOSED
NEW DWELLING

OWNER: PEDRO DIAZ RESIDENCE
25183 CENTRAL BLVD.
HAYWARD, CA 94541

Guillermo Prado

GP RESIDENTIAL DESIGNS
829 S. 7th Street • San Jose, CA 95112
Phone: (408) 292-3800 • (408) 274-3069
gpresidential@gmail.com

Date	1/20/20
Scale	AS NOTED
Drawn	AP
Job	
Sheet	A-4

24x36 SHEET–PLOT 1=1

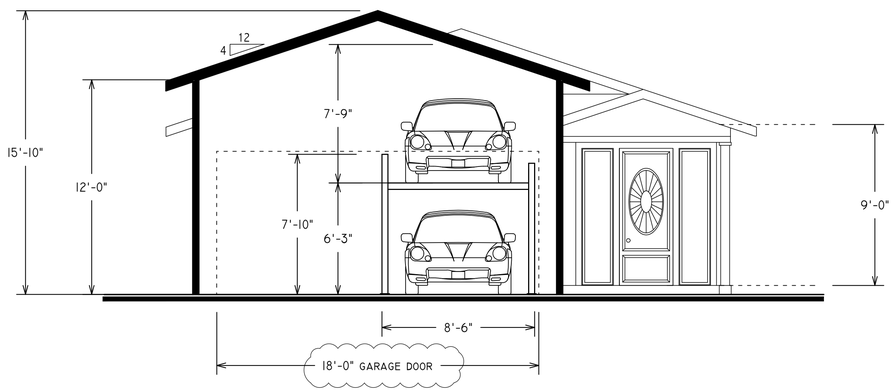

SECTION -A
SCALE: 1/4"= 1'-0"

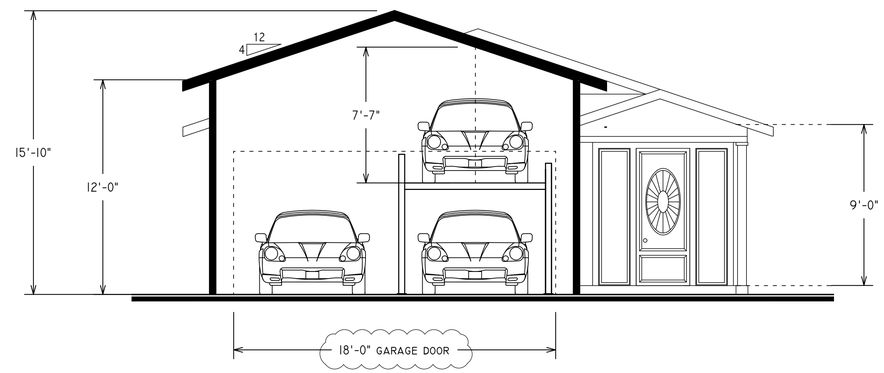

SECTION -B
SCALE: 1/4"= 1'-0"

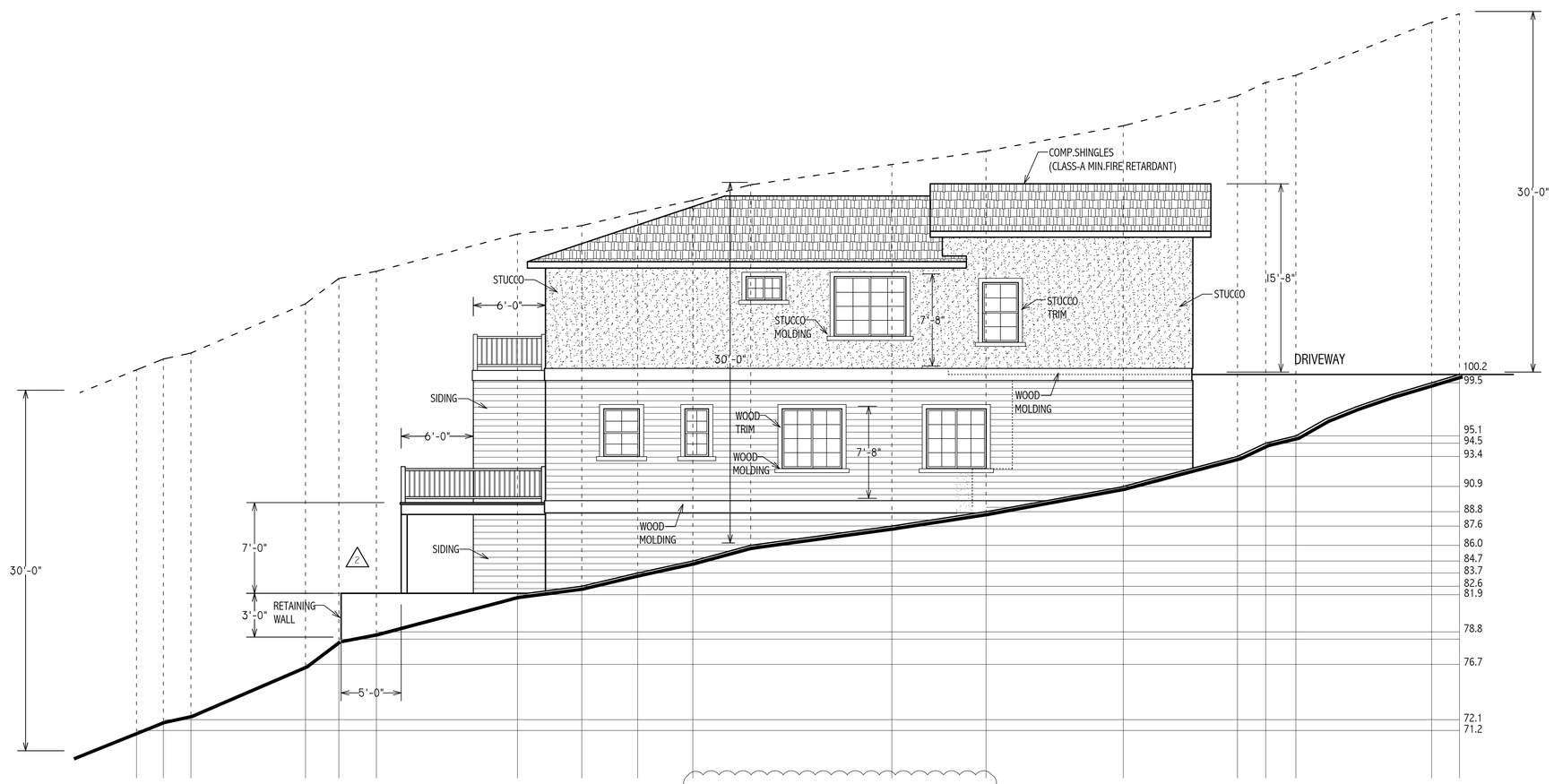

LEFT VIEW ELEVATION
SCALE 3/16"= 1'-0"

NO.	REVISION	DATE	BY	ISSUED FOR
1	P.C. COMMENTS	2/17/21	GP	
2	P.C. COMMENTS	5/27/21	GP	
3				
4				

PROPOSED
NEW DWELLING

OWNER: PEDRO DIAZ RESIDENCE
25183 CENTRAL BLVD.
HAYWARD, CA 94541

Guillermo Prado

GP RESIDENTIAL DESIGNS
829 S. 7th Street • San Jose, CA 95112
Phone: (408) 292-3800 • (408) 274-3069
gpresidential@gmail.com

Date	1/20/20
Scale	AS NOTED
Drawn	AP
Job	
Sheet	A-5

24x36 SHEET-PLOT 1=1

GRADING & DRAINAGE NOTES:

NOTE: THIS DRAWING IS APPROVED SUBJECT TO:

1. ALL GRADING IS SUBJECT TO OBSERVATION BY THE CITY. PERMITTEE OR REPRESENTATIVE SHALL NOTIFY THE CITY OF HAYWARD DEPARTMENT OF PUBLIC WORKS PROJECT INSPECTOR AT LEAST 48 HOURS BEFORE START OF ANY GRADING.

2. APPROVAL OF THIS PLAN APPLIES ONLY TO (A) THE EXCAVATION, PLACEMENT, AND COMPACTION OF NATURAL EARTH MATERIALS, (B) THE INSTALLATION OF ON-SITE (I.E. PRIVATE PROPERTY) STORM WATER CONVEYANCE AND TREATMENT FACILITIES THAT ARE OUTSIDE OF THE 5-FOOT BUILDING ENVELOPE, AND (C) THE INSTALLATION OF RETAINING STRUCTURES. THIS APPROVAL DOES NOT CONFER ANY RIGHTS OF ENTRY TO EITHER PUBLIC PROPERTY OR THE PRIVATE PROPERTY OF OTHERS. APPROVAL OF THIS PLAN ALSO DOES NOT CONSTITUTE APPROVAL OF ANY IMPROVEMENTS WITH THE EXCEPTION OF THOSE LISTED ABOVE. PROPOSED IMPROVEMENTS, WITH THE EXCEPTION OF THOSE LISTED ABOVE, ARE SUBJECT TO REVIEW AND APPROVAL BY THE RESPONSIBLE AUTHORITIES AND ALL OTHER REQUIRED PERMITS SHALL BE OBTAINED.

3. UNLESS OTHERWISE NOTED ON THE PLAN, ANY DEPICTION OF A RETAINING STRUCTURE ON THIS PLAN SHALL NOT CONSTITUTE APPROVAL FOR CONSTRUCTION OF THE RETAINING STRUCTURE UNLESS A SEPARATE STRUCTURAL REVIEW, BY THE DEPARTMENT OF PUBLIC WORKS IS COMPLETED AND APPROVED.

4. IT SHALL BE THE RESPONSIBILITY OF THE PERMITTEE OR AGENT TO IDENTIFY, LOCATE AND PROTECT ALL UNDERGROUND FACILITIES.

5. THE PERMITTEE OR AGENT SHALL MAINTAIN THE STREETS, SIDEWALKS AND ALL OTHER PUBLIC RIGHTS-OF-WAY IN A CLEAN, SAFE AND USABLE CONDITION. ALL SPILLS OF SOIL, ROCK OR CONSTRUCTION DEBRIS SHALL BE REMOVED FROM THE PUBLICLY OWNED PROPERTY DURING CONSTRUCTION AND UPON COMPLETION OF THE PROJECT. ALL ADJACENT PROPERTY, PRIVATE OR PUBLIC SHALL BE MAINTAINED IN A CLEAN, SAFE AND USABLE CONDITION.

6. ALL GRADING SHALL BE PERFORMED IN SUCH A MANNER AS TO COMPLY WITH THE STANDARDS ESTABLISHED BY THE AIR QUALITY MANAGEMENT DISTRICT FOR AIRBORNE PARTICULATES.

7. IN THE EVENT THAT HUMAN REMAINS AND/OR CULTURAL MATERIALS ARE FOUND, ALL PROJECT-RELATED CONSTRUCTION SHOULD CEASE WITHIN A 100-FOOT RADIUS. THE CONTRACTOR SHALL, PURSUANT TO SECTION 7050.5 OF THE HEALTH AND SAFETY CODE, AND SECTION 5097.94 OF THE PUBLIC RESOURCES CODE OF THE STATE OF CALIFORNIA, NOTIFY THE MARIN COUNTY CORONER IMMEDIATELY.

8. THIS PLAN DOES NOT APPROVE THE REMOVAL OF TREES. APPROPRIATE TREE REMOVAL PERMITS AND METHODS OF TREE PRESERVATION SHOULD BE OBTAINED FROM THE CITY'S PLANNING DEPARTMENT AND THE CITY ARBORIST.

9. FOR NON-RESIDENTIAL PROJECTS, ANY NON-HAZARDOUS EXPORT RESULTING FROM PROJECT RELATED EXCAVATION OR LAND CLEARING SHALL BE 100% REUSED AND RECYCLED PER CALIFORNIA GREEN BUILDING STANDARDS CODE SECTION 5.408.

10. ALL GRADING WORK SHALL CONFORM TO THE RECOMMENDATIONS OF THE PROJECT GEOTECHNICAL REPORT AND/OR THE PROJECT SOIL ENGINEER. ALL GRADING WORK SHALL BE OBSERVED AND APPROVED BY THE SOIL ENGINEER.
REPORT DATE:
REPORT NUMBER:
SOILS ENGINEERING COMPANY;
CONTACT INFORMATION:

11. THE SOIL ENGINEER SHALL BE NOTIFIED AT LEAST 48 HOURS BEFORE BEGINNING ANY GRADING. UNOBSERVED AND/OR UNAPPROVED GRADING WORK SHALL BE REMOVED AND REPLACED UNDER OBSERVATION.

12. PERIMETER BUILDING GRADES SHALL SLOPE AWAY FROM BUILDINGS AT LEAST 5% MINIMUM

13. ALL DOWNSPOUTS SHALL HAVE SPLASH BOXES AS SHOWN ON THE GRADING AND DRAINAGE PLAN. DIRECTION OF THE FLOW SHALL BE AWAY FROM THE BUILDING.

BENCH MARK

DESCRIPTION: ASSUMED BENCHMARK, MAG NAIL ON STREET, NEAR THE WESTERLY CORNER OF LOT AS SHOWN: ELEV.: 100.00'

EARTH WORK QUANTITIES

CUT: 9 CY
FILL: 253 CY
EXPORT: 0 CY
IMPORT: 244 CY

NOTE: EARTHWORK QUANTITIES SHOWN ARE APPROXIMATE. IT SHALL BE THE CONTRACTOR'S RESPONSIBILITY TO INDEPENDENTLY ESTIMATE QUANTITIES FOR HIS/HER OWN USE.
THE PAD OF THE HOUSE IS NOT INCLUDED

LEGEND

DESCRIPTION	SYMBOL
BOUNDARY LINE	
LOT LINE	
EASEMENT LINE	
SIDEWALK	
WOOD FENCE	X — X
CHAIN LINK FENCE	
RETAINING WALL	
DRIVEWAY DRAIN INLET	
AREA DRAIN	
DROP INLET	
MONUMENT	
FIRE HYDRANT	
ELECTROLIER	
WATER METER	W
AC UNIT	
SANITARY SEWER LATERAL	
STORM DRAIN	SD
SANITARY SEWER	SS
STREET LIGHT CONDUITS	SL
WATER	W
JOINT TRENCH	JT
HOUSE SERVICE	SVC
SLOPE ARROW	
EXISTING CONTOUR	100
PROPOSED CONTOUR	100
OVERLAND RELEASE	
DIRECTION OF SURFACE DRAINAGE	
5% SLOPE AWAY FROM BUILDING	>>
GAS LINE	GAS
OVERHEAD ELECTRICAL LINE	OE
UNDERGROUND ELECTRICAL LINE	UE
DOWNSPOUTS W/SPLASH BOX	
TREE TO BE REMOVED	X
ADJECENT GRADE	AG

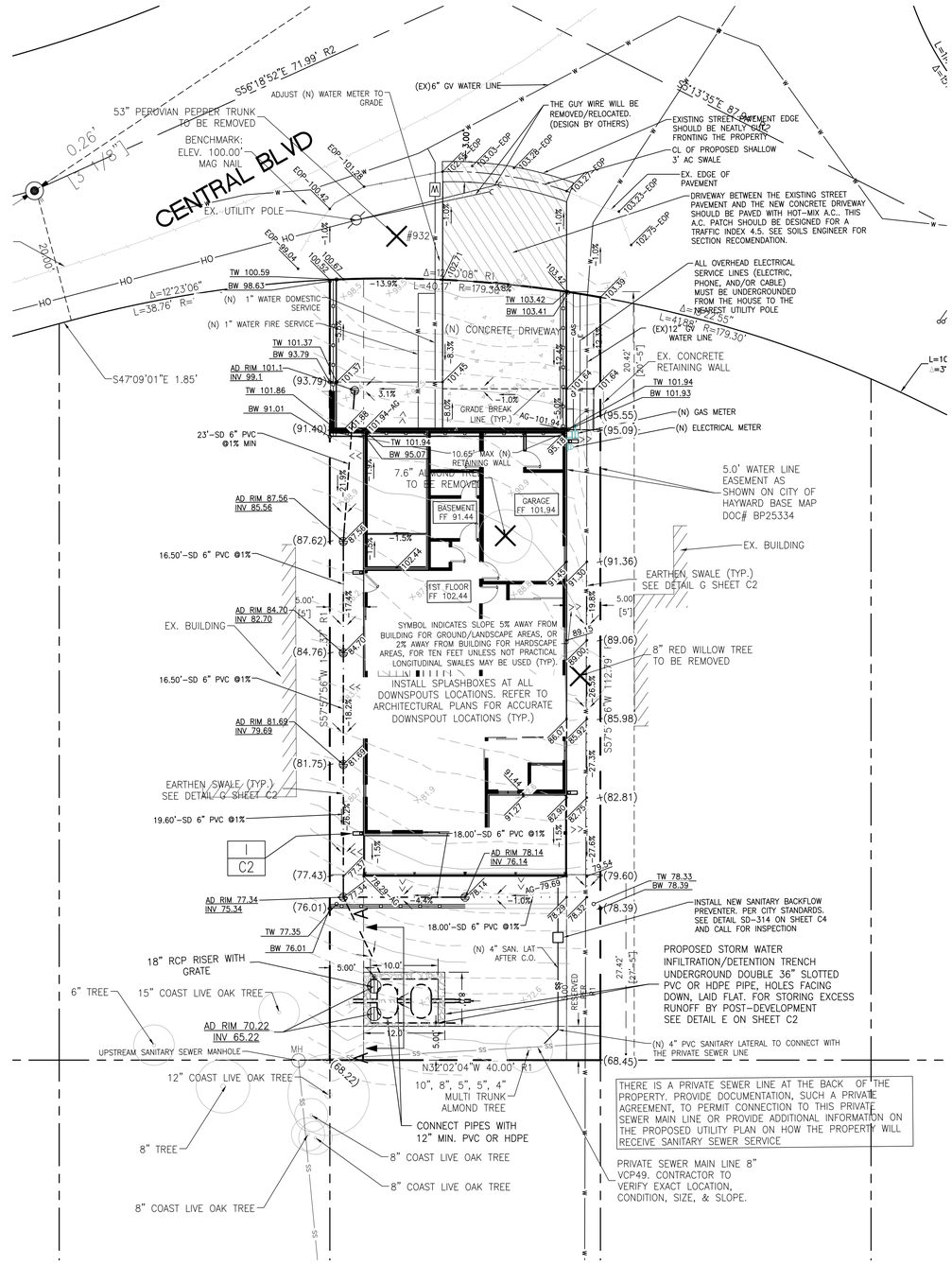

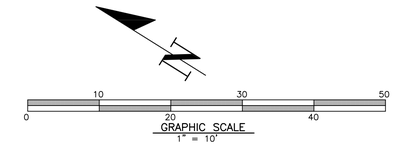

ABBREVATIONS

AC = ASPHALT CONCRETE
AD = AREA DRAIN
BC = BEGIN CURVE
BS = BOTTOM OF STAIR
BU = BUBBLE UP
BVC = BEGIN VERTICAL CURVE
BRW = BOTTOM OF RETAINING WALL
CB = CATCH BASIN
CL = CENTERLINE
CO = CLEANOUT
DS = DOWNSPOUT WITH SPLASH BOX
EC = END CURVE
ELEV. = ELEVATION
EVC = END VERTICAL CURVE
EX. = EXISTING
F/C = FACE OF CURB
FF = FINISHED FLOOR ELEVATION
FH = FIRE HYDRANT
FL = FLOW LINE
GB = GRADE BREAK
GFF = GARAGE FINISH FLOOR
HP = HIGH POINT
HC = HANDICAP UNIT
INV = INVERT
LP = LOW POINT
PAD = PAD ELEVATION
PCC = PORTLAND CEMENT CONCRETE
PL = PROPERTY LINE
PV = PAVEMENT GRADE
PVC = POLYVINYL CHLORIDE PIPE
PVI = POINT OF VERTICAL INTERSECTION
RCP = REINFORCED CONCRETE PIPE
ROW = RIGHT OF WAY
S=.004> SLOPE
SD = STORM DRAIN
SDMH = STORM DRAIN MANHOLE
SG = SUBGRADE ELEVATION
SS = SANITARY SEWER
SSMH = SANITARY SEWER MANHOLE
STA = STATION
TC = TOP OF CURB
TF = TOP OF FENCE
TRW = TOP OF RETAINING WALL
TS = TOP OF STAIR
TW = TOP OF WALL
VCP = VITRIFIED CLAY PIPE
WM = WATER METER
WV = WATER VALVE

CONTRACTOR AGREES THAT HE SHALL ASSUME SOLE AND COMPLETE RESPONSIBILITY FOR JOB SITE CONDITIONS DURING THE COURSE OF CONSTRUCTION OF THIS PROJECT, INCLUDING SAFETY OF ALL PERSONS AND PROPERTY THAT MAY BE AFFECTED BY THE CONSTRUCTION WORK PERFORMED. IT IS ALSO AGREED THAT THE CONTRACTOR SHALL DEFEND, INDEMNIFY AND HOLD THE OWNER AND THE ENGINEER HARMLESS FROM ANY AND ALL LIABILITY, REAL OR ALLEGED, IN CONNECTION WITH THE PERFORMANCE OF WORK ON THIS PROJECT, EXCEPTING FOR LIABILITY ARISING FROM THE SOLE NEGLIGENCE OF THE OWNER OR THE ENGINEER.

REVISIONS	DATE	CITY	BY

REGISTERED PROFESSIONAL ENGINEER PORFIRIO OSCAR OSUNA No. 70829 Exp. 6-30-21 CIVIL STATE OF CALIFORNIA

P. Oscar Osuna
PORFIRIO OSCAR OSUNA
RCE 70829 EXP. 6-30-21

OSUNA ENGINEERING INC.
Planning | Surveying | Civil Engineering
CONSULTING CIVIL ENGINEERS & LAND SURVEYORS
117 BERNAL RD. STE. 70-336
SAN JOSE, CA 95119
TEL. (408) 772-4381
info@osunaengineering.com

GRADING & DRAINAGE PLAN
CENTRAL BLVD
HAYWARD, CALIFORNIA

Project No.: 1781 | Designed: JO | Checked: O.O. | Date:02/17/2021

SHEET
C1
OF 4 SHEETS

N.T.S.

A NOT USED

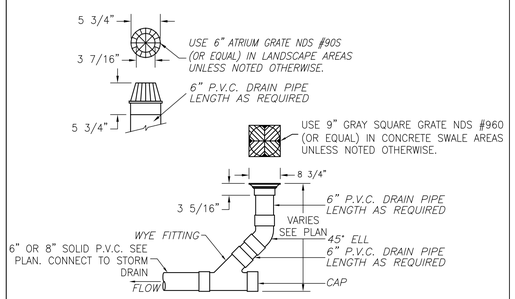

LANDSCAPE DRAIN DETAIL
N.T.S.

B AREA DRAIN DETAIL

NOTE: ALL GRADING IS BASED OFF OF THIS ARCHITECTURAL SECTION. THE ADJACENT GRADE AND FF DIMENSIONS SHOWN HERE MUST BE KEPT. NOTIFY THE ENGINEER BEFORE MAKING ANY CHANGES.

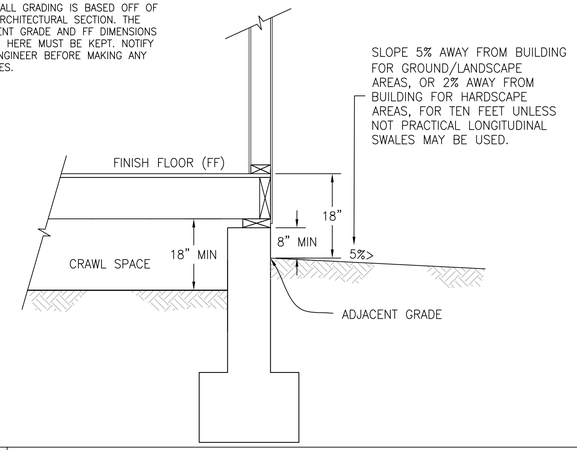

C TYPICAL FOUNDATION/FF/GROUND SECTION

NOTE: ALL GRADING IS BASED OFF OF THIS ARCHITECTURAL SECTION. THE ADJACENT GRADE AND GFF DIMENSIONS SHOWN HERE MUST BE KEPT. NOTIFY THE ENGINEER BEFORE MAKING ANY CHANGES.

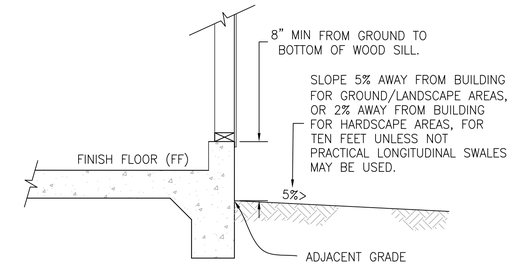

N.T.S.

D TYPICAL FOUNDATION/GFF/GROUND SECTION

CONTRACTOR AGREES THAT HE SHALL ASSUME SOLE AND COMPLETE RESPONSIBILITY FOR JOB SITE CONDITIONS DURING THE COURSE OF CONSTRUCTION OF THIS PROJECT, INCLUDING SAFETY OF ALL PERSONS AND PROPERTY. THAT THE REQUIREMENT SHALL APPLY CONTINUOUSLY AND NOT BE LIMITED TO NORMAL WORKING HOURS. CONTRACTOR FURTHER AGREES TO DEFEND, INDEMNIFY AND HOLD THE OWNER AND THE ENGINEER HARMLESS FROM ANY AND ALL LIABILITY, REAL OR ALLEGED, IN CONNECTION WITH THE PERFORMANCE OF WORK ON THIS PROJECT, EXCEPTING FOR LIABILITY ARISING FROM THE SOLE NEGLIGENCE OF THE OWNER OR THE ENGINEER.

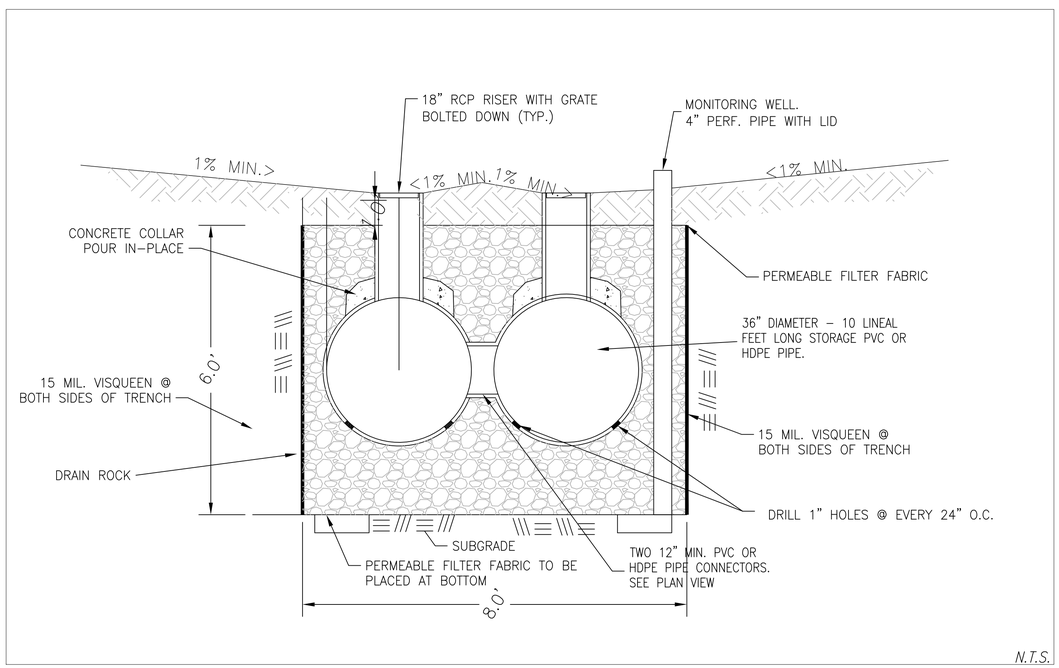

N.T.S.

E STORM WATER INFILTRATION/DETENTION TRENCH DETAIL

F NOT USED

SLOPE 5% AWAY FROM BUILDING FOR GROUND/LANDSCAPE AREAS, OR 2% AWAY FROM BUILDING FOR HARDSCAPE AREAS, FOR TEN FEET UNLESS NOT PRACTICAL LONGITUDINAL SWALES MAY BE USED.

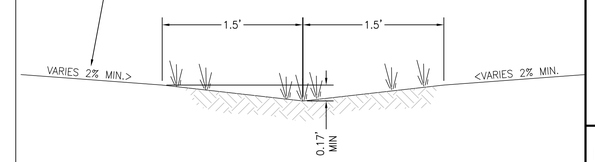

N.T.S.

G EARTHEN SWALE DETAIL

H NOT USED

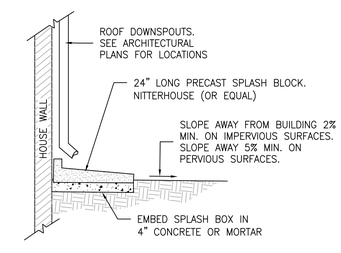

SPLASH BLOCK/DOWNSPOUT DETAIL
N.T.S.

N.T.S.

I SPLASH BLOCK/DOWNSPOUT DETAIL

REVISIONS	DATE	CITY	BY

REGISTERED PROFESSIONAL ENGINEER PORFIRIO OSCAR OSUNA No. 70829 Exp. 6-30-21 CIVIL STATE OF CALIFORNIA

PORFIRIO OSCAR OSUNA
RCE 70829 EXP. 6-30-21

OSUNA ENGINEERING INC.
Planning | Surveying | Civil Engineering
CONSULTING CIVIL ENGINEERS & LAND SURVEYORS
117 BERNAL RD. STE. 70-336
SAN JOSE, CA 95119
TEL. (408) 772-4381
info@osunaengineering.com

GRADING & DRAINAGE PLAN
CONSTRUCTION DETAILS
CENTRAL BLVD

HAYWARD, CALIFORNIA
Project No.: 1781 | Designed: O.O | Checked: O.O | Date: 02/17/2021

SHEET
C2
OF 4 SHEETS

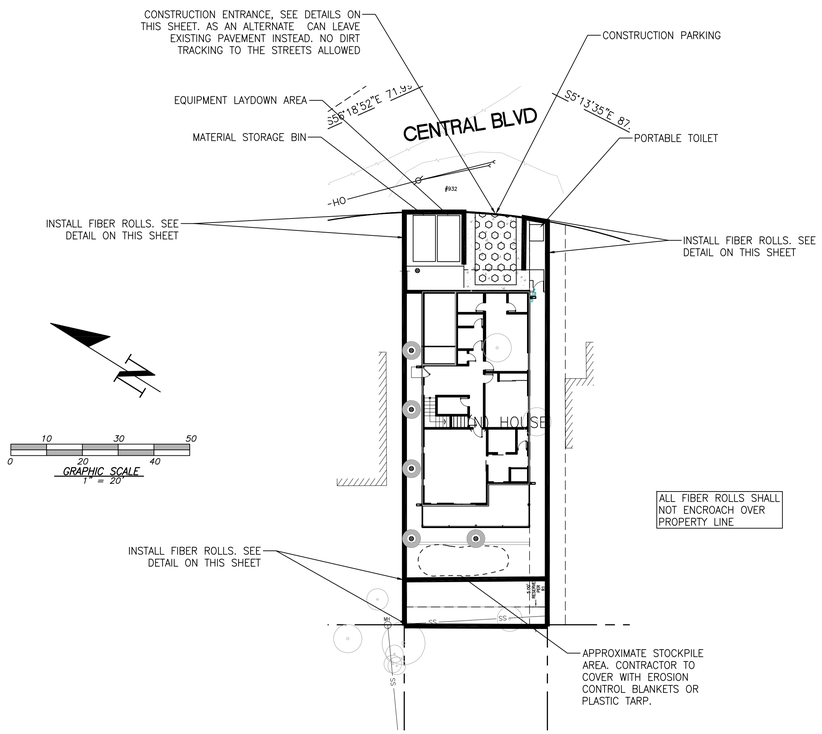

NOTES:
1. PROTECT ALL INLETS IN THE PUBLIC STREETS SURROUNDING THE SITE.
2. ALL ON-SITE LANDSCAPE AREA DRAINS TO BE CAPPED OR PROTECTED UNTIL LANDSCAPING IS FINISHED.

LEGEND

PROPOSED	DESCRIPTION
	SITE BOUNDARY
	STABILIZED CONSTRUCTION ENTRANCE 2"-3" ROCK (MIN)
	FIBER ROLL
	INLET PROTECTION

MAINTENANCE NOTES

MAINTENANCE IS TO BE PERFORMED AS FOLLOWS:

1. REPAIR DAMAGES CAUSED BY SOIL EROSION OR CONSTRUCTION AT THE END OF EACH WORKING DAY.
2. SWALES SHALL BE INSPECTED PERIODICALLY AND MAINTAINED AS NEEDED.
3. SEDIMENT TRAPS, BERMS, AND SWALES ARE TO BE INSPECTED AFTER EACH STORM AND REPAIRS MADE AS NEEDED.
4. SEDIMENT SHALL BE REMOVED AND SEDIMENT TRAP RESTORED TO ITS ORIGINAL DIMENSIONS WHEN SEDIMENT HAS ACCUMULATED TO A DEPTH OF 1 FOOT.
5. SEDIMENT REMOVED FROM TRAP SHALL BE DEPOSITED IN A SUITABLE AREA AND IN SUCH A MANNER THAT IT WILL NOT ERODE.
6. RILLS AND GULLIES MUST BE REPAIRED.

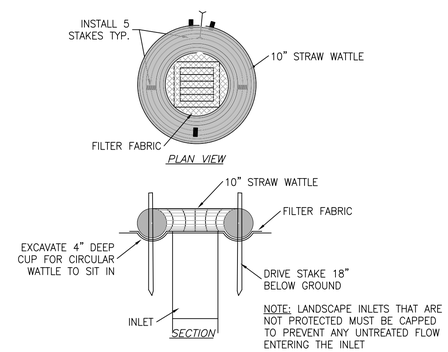

ALTERNATE FIBER ROLL INLET PROTECTION MAY BE USED IN LANDSCAPE AREA DRAINS
N.T.S.

EROSION & SEDIMENT CONTROL NOTES

1. NOT USED
2. THE DEVELOPER IS RESPONSIBLE FOR ENSURING THAT ALL CONTRACTORS AND SUBCONTRACTORS ARE AWARE OF ALL STORM WATER QUALITY MEASURES AND IMPLEMENT SUCH MEASURES. FAILURE TO COMPLY WITH THE APPROVED CONSTRUCTION BEST MANAGEMENT PRACTICES WILL RESULT IN THE ISSUANCE OF CORRECTION NOTICES, CITATIONS, AND/OR STOP ORDERS.
3. ANY VEHICLE OR EQUIPMENT WASHING/STEAM CLEANING MUST BE DONE AT AN APPROPRIATELY EQUIPPED FACILITY WHICH DRAINS TO THE SANITARY SEWER. OUTDOOR WASHING MUST BE MANAGED IN SUCH A WAY THAT THERE IS NO DISCHARGE OF SOAPS, SOLVENTS, CLEANING AGENTS OR OTHER POLLUTANTS TO THE STORM DRAINS. WASH WATER SHALL DISCHARGE TO THE SANITARY SEWER, SUBJECT TO REVIEW AND APPROVAL OF UNION SANITARY DISTRICT.
4. THE CONTRACTOR SHALL BE RESPONSIBLE FOR LITTER CONTROL AND SWEEPING OF ALL PAVED SURFACES DURING CONSTRUCTION.
5. THE FACILITIES SHOWN ON THIS PLAN ARE DESIGNED TO CONTROL EROSION AND SEDIMENT DURING THE RAINY SEASON, OCTOBER 1 TO APRIL 15. EROSION CONTROL MEASURES ARE TO BE FUNCTIONAL PRIOR TO OCTOBER 1ST OF ANY YEAR GRADING OPERATIONS HAVE LEFT AREAS UNPROTECTED FROM EROSION.
6. ALL ON-SITE STORM DRAINS SHALL BE CLEANED IMMEDIATELY BEFORE THE START OF THE RAINY SEASON BEGINNING ON OCTOBER 1ST EACH YEAR, SUBJECT TO THE REVIEW OF THE BUILDING/ENGINEERING INSPECTOR.
7. IF RAINY WEATHER BECOMES IMMINENT, GRADING OPERATIONS SHALL BE STOPPED AND EROSION CONTROL MEASURES SHALL BE IMPLEMENTED TO PROTECT DISTURBED AREAS.
8. DURING THE RAINY SEASON, ALL PAVED AREAS SHALL BE KEPT CLEAR OF EARTH MATERIAL AND DEBRIS. THE SITE SHALL BE MAINTAINED SO AS TO MINIMIZE SEDIMENT LADEN RUNOFF TO ANY STORM DRAIN SYSTEM.
9. CONSTRUCTION ENTRANCES SHALL CONSIST OF A MINIMUM 8" THICK LAYER OF 3"-4" FRACTURED STONE AGGREGATE UNLAID WITH GEOTEXTILE LINER FOR A MINIMUM DISTANCE OF 50 FEET, AND IS TO BE PROVIDED AT EACH VEHICLE ACCESS POINT TO EXISTING PAVED STREETS. THE DEPTH AND LENGTH OF AGGREGATE MAY NEED TO BE ADJUSTED IN THE FIELD TO ENSURE NO TRACKING OF SEDIMENT ONTO EXISTING PAVED STREETS. CONSTRUCTION ENTRANCES SHALL SLOPE AWAY FROM EXISTING PAVED STREETS.
10. INLETS NOT USED IN CONJUNCTION WITH EROSION CONTROL MEASURES ARE TO BE BLOCKED UNLESS THE AREA DRAINED IS UNDISTURBED OR STABILIZED.
11. BORROW AREAS AND TEMPORARY STOCKPILES SHALL BE PROTECTED WITH APPROPRIATE EROSION CONTORL MEASURES TO THE SATISFACTION OF THE CITY ENGINEER.
12. NO STRAW BALES OR SILT FENCES SHALL BE USED AS EROSION CONTROL MEASURES. SILT FENCES MAY ONLY BE USED AS A PHYSICAL BARRIER TO PREVENT VEHICULAR AND PEDESTRIAN TRAFFIC FROM USING NON-APPROVED ACCESS POINTS (E.G. – ALONG RIGHT-OF-WAY).
13. ALL DISTURBED AREAS INCLUDING FLAT PADS ARE TO BE TREATED WITH STRAW AND TACKIFIER AT A RATE OF 2 TONS PER ACRE APPROXIMATELY 3 INCHES THICK.

SUPPLEMENTAL EROSION & SEDIMENT CONTROL NOTES

1. SEE STANDARD EROSION & SEDIMENT CONTROL NOTES ABOVE.
2. THE FACILITIES SHOWN ON THIS PLAN ARE DESIGNED TO CONTROL EROSION AND SEDIMENT DURING THE RAINY SEASON, OCTOBER 1 TO APRIL 30. FACILITIES ARE TO BE OPERABLE PRIOR TO OCTOBER 1 OF ANY YEAR. GRADING OPERATIONS DURING THE RAINY SEASON WHICH LEAVE DENUDED SLOPES SHALL BE PROTECTED WITH EROSION CONTROL MEASURES IMMEDIATELY FOLLOWING GRADING ON THE SLOPES.
3. CONSTRUCTION ENTRANCES SHALL BE INSTALLED PRIOR TO COMMENCEMENT OF GRADING. ALL CONSTRUCTION TRAFFIC ENTERING ONTO THE PAVED ROADS MUST CROSS THE STABILIZED CONSTRUCTION ENTRANCE WAYS.
4. CONTRACTOR SHALL MAINTAIN STABILIZED ENTRANCE AT EACH VEHICLE ACCESS POINT TO EXISTING PAVED STREETS. ANY MUD OR DEBRIS TRACKED ONTO PUBLIC STREETS SHALL BE REMOVED DAILY AND AS REQUIRED BY THE CITY.
5. INLET PROTECTION SHALL BE INSTALLED AT OPEN INLETS TO PREVENT SEDIMENT FROM ENTERING THE STORM DRAIN SYSTEM. INLETS NOT USED IN CONJUNCTION WITH EROSION CONTROL ARE TO BE BLOCKED TO PREVENT ENTRY OF SEDIMENT.
6. THIS EROSION AND SEDIMENT CONTROL PLAN MAY NOT COVER ALL THE SITUATIONS THAT MAY ARISE DURING CONSTRUCTION DUE TO UNANTICIPATED FIELD CONDITIONS. VARIATIONS AND ADDITIONS MAY BE MADE TO THIS PLAN IN THE FIELD. NOTIFY THE CITY REPRESENTATIVE OF ANY FIELD CHANGES.

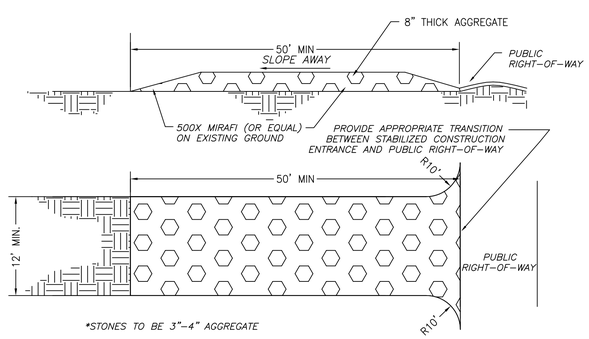

MAINTENANCE:

THE ENTRANCE SHALL BE MAINTAINED IN A CONDITION THAT WILL PREVENT TRACKING OR FLOWING SEDIMENT ONTO PUBLIC RIGHTS-OF-WAY. THIS MAY REQUIRE PERIODIC TOP DRESSING WITH ADDITIONAL STONE AS CONDITIONS DEMAND, AND REPAIR AND/OR CLEAN OUT ANY MEASURES USED TO TRAP SEDIMENT.

ALL SEDIMENT SPILLED, DROPPED, WASHED, OR TRACKED ONTO PUBLIC RIGHTS-OF-WAY SHALL BE REMOVED IMMEDIATELY.

WHEN NECESSARY, WHEELS SHALL BE CLEANED TO REMOVE SEDIMENT PRIOR TO ENTRANCE ONTO PUBLIC RIGHTS-OF-WAY. THIS SHALL BE DONE AT AN AREA STABILIZED WITH CRUSHED STONE, WHICH DRAINS INTO AN APPROVED SEDIMENT TRAP OR SEDIMENT BASIN.

STABILIZED CONSTRUCTION ENTRANCE
N.T.S.

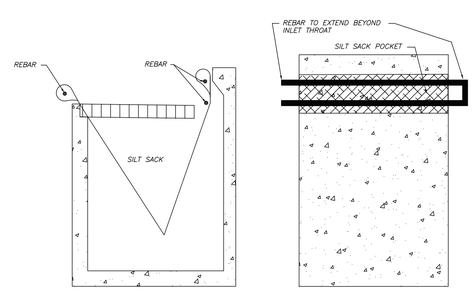

CALIFORNIA MODIFIED SILT SACK
REED & GRAHAM, INC. (OR EQUAL)
BEFORE & AFTER STREETS ARE PAVED
N.T.S.

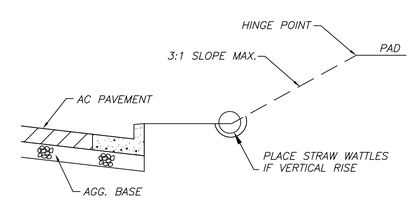

FRONT YARD SLOPE DETAIL AFTER STREET ARE PAVED
N.T.S.

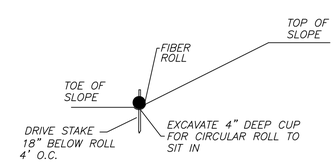

FIBER ROLL INSTALLATION DETAIL
N.T.S.

CONTRACTOR AGREES THAT HE SHALL ASSUME SOLE AND COMPLETE RESPONSIBILITY FOR JOB SITE CONDITIONS DURING THE COURSE OF CONSTRUCTION OF THIS PROJECT, INCLUDING SAFETY OF ALL PERSONS AND PROPERTY. THAT THIS REQUIREMENT SHALL APPLY CONTINUOUSLY AND NOT BE LIMITED TO NORMAL WORKING HOURS. SHALL DEFEND, INDEMNIFY, AND HOLD THE OWNER AND THE ENGINEER HARMLESS FROM ANY AND ALL LIABILITY, REAL OR ALLEGED, IN CONNECTION WITH THE PERFORMANCE OF WORK ON THIS PROJECT, EXCEPTING FOR LIABILITY ARISING FROM THE SOLE NEGLIGENCE OF THE OWNER OR THE ENGINEER.

BY	CITY	DATE	REVISIONS

REGISTERED PROFESSIONAL ENGINEER PORFIRIO OSCAR OSUNA No. 70829 Exp. 6-30-21 CIVIL STATE OF CALIFORNIA

P. Oscar Osuna
PORFIRIO OSCAR OSUNA
RCE 70829 EXP. 6-30-21

OSUNA ENGINEERING INC.
Planning | Surveying | Civil Engineering
CONSULTING CIVIL ENGINEERS & LAND SURVEYORS
117 BERNAL RD. STE. 70-336
SAN JOSE, CA 95119
TEL: (408) 772-4381
info@osunaengineering.com

GRADING & DRAINAGE PLAN
EROSION CONTROL
CENTRAL BLVD

HAYWARD, CALIFORNIA

Project No.: 1781 | Designed: JJO | Checked: O.J. | Date:02/17/2021

SHEET
C3
OF 4 SHEETS

CONTRACTOR AGREES THAT HE SHALL ASSUME SOLE AND COMPLETE RESPONSIBILITY FOR JOB SITE CONDITIONS DURING THE COURSE OF CONSTRUCTION OF THIS PROJECT, INCLUDING SAFETY OF ALL PERSONS AND PROPERTY; THAT THIS REQUIREMENT SHALL APPLY CONTINUOUSLY AND NOT BE LIMITED TO NORMAL WORKING HOURS; AND THAT THE CONTRACTOR SHALL DEFEND, INDEMNIFY AND HOLD THE OWNER AND THE ENGINEER HARMLESS FROM ANY AND ALL LIABILITY, REAL OR ALLEGED, IN CONNECTION WITH THE PERFORMANCE OF WORK ON THIS PROJECT, EXCEPTING FOR LIABILITY ARISING FROM THE SOLE NEGLIGENCE OF THE OWNER OR THE ENGINEER.

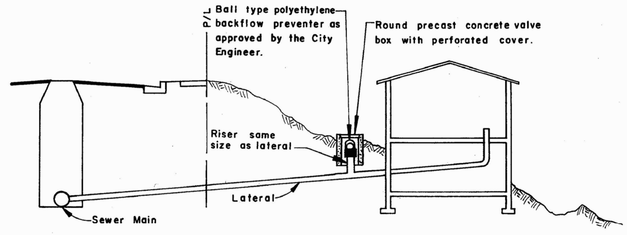

NOTES:

1. If the lowest fixture in any building is below the rim elevation of the nearest upstream manhole or riser, a backflow prevention valve shall be installed.
2. The valve shall be installed between the house plumbing and the property line.
3. The top of the valve box shall be a minimum of 2" above adjacent ground. The adjacent ground shall be sloped to drain away from the valve box.
4. The top of the valve box shall be a minimum of 12" below the lowest plumbing fixture in the building.

REV	DATE	BY

CITY OF HAYWARD
ENGINEERING DIVISION
DRAWN: R.T.F./P.B./P.H. DATE: April 1977
ENGINEER: R.T.F.
SCALE: NONE
APPROVED: CITY ENGINEER
R.V. WILLIAMS
R.C.E. 16564

STANDARD BACK FLOW PREVENTER

DWG. NO. SD-314
REVD 8-15-93
SHT. 1 OF 1

SHEET C4 OF 4 SHEETS

GRADING & DRAINAGE PLAN
CITY STANDARD DETAILS
CENTRAL BLVD

HAYWARD, CALIFORNIA

Project No.: 1781 | Designed: J.O | Checked: O.O | Date: 02/17/2021

OSUNA ENGINEERING INC.
Planning | Surveying | Civil Engineering
CONSULTING CIVIL ENGINEERS & LAND SURVEYORS
117 BERNAL RD. STE. 70-336
SAN JOSE, CA 95119
TEL. (408) 772-4381
Info@osunaengineering.com

PORFIRIO OSUNA
RCE 70829 EXP. 6-30-21

REGISTERED PROFESSIONAL ENGINEER
PORFIRIO OSUNA
No. 70829
Exp. 6-30-21
STATE OF CALIFORNIA

	BY	CITY	DATE	REVISIONS
△				
△				
△				
△				
△				

Attachment IV

LEGEND

- 200 — EXISTING CONTOUR LINE
- 200 — NATURAL GRADE CONTOUR LINE
- FOUND CITY MONUMENT BOX, OR AS NOTED
- BOUNDARY OF PROPERTY SURVEYED
- ( ) RECORD INFORMATION
- CENTERLINE
- CURB INLET
- CURB LINE
- DRIVEWAY APRON
- ELECTROLIER
- X — FENCE
- FIRE HYDRANT
- FLAT GRATE INLET
- O.H. PWR — OVERHEAD POWER LINE
- O.H. TEL — OVERHEAD TELEPHONE LINE
- SS — SANITARY SEWER LINE
- SANITARY SEWER MANHOLE
- SANITARY SEWER CLEANOUT
- SIGN
- SD — STORM DRAIN LINE
- STORM DRAIN MANHOLE
- UTILITY BOX
- UTILITY POLE
- W — WATER LINE
- WATER METER
- WATER VALVE
- EM — ELECTRIC METER
- WH — WATER HEATER
- G — GAS

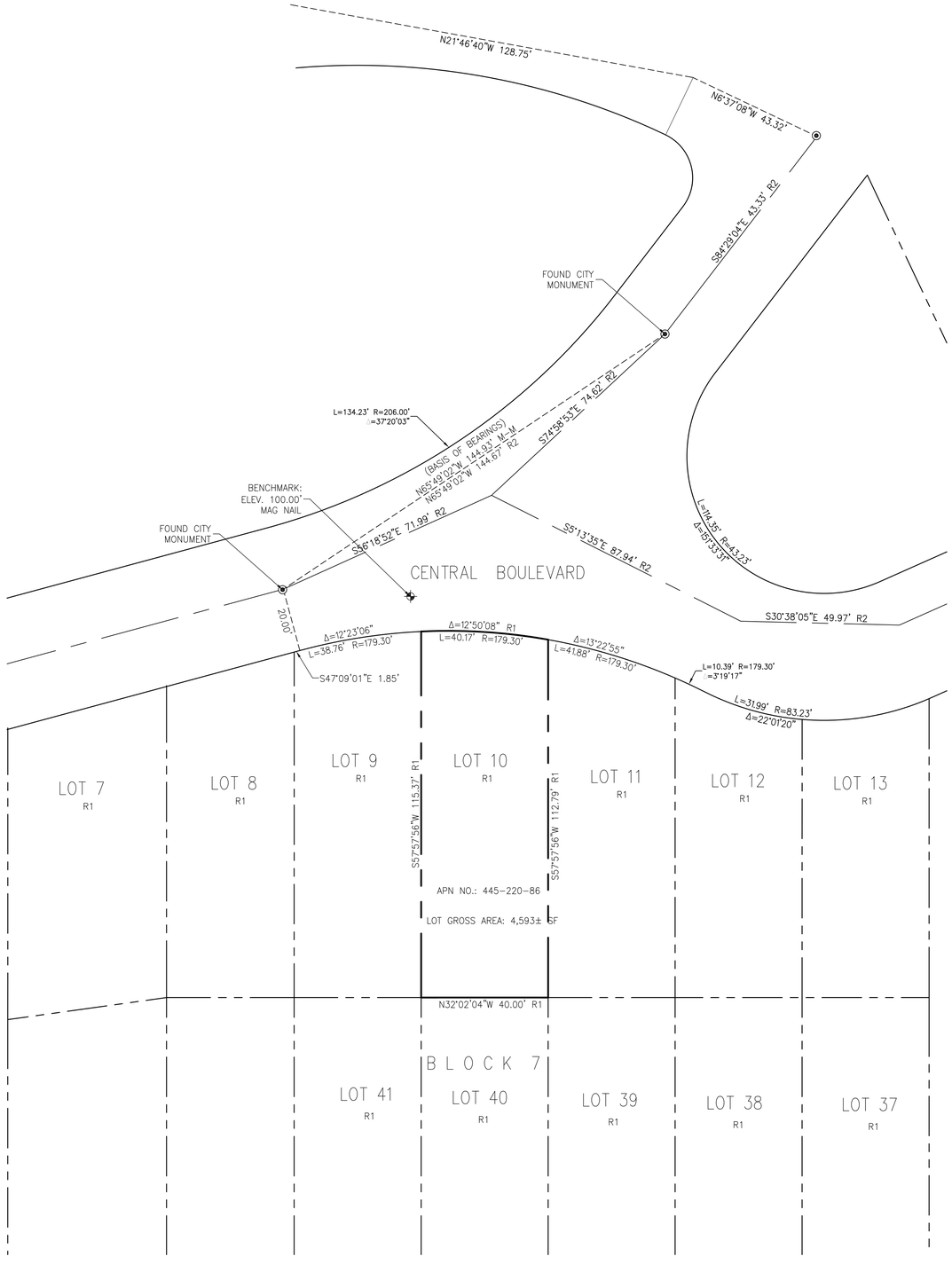

GRAPHIC SCALE
1" = 20'

THE BEARING NORTH 65°49'02" WEST OF THE MONUMENT LINE OF CENTRAL BOULEVARD AS CALCULATED ON THAT MAP OF MONUMENTATION MAP FILED FOR RECORD IN BOOK I OF MAPS PAGES 3 THROUGH 6, ALAMEDA COUNTY RECORDS, AND AS FOUND MONUMENTED, WAS TAKEN AS THE BASIS OF BEARING FOR THIS SURVEY.

REFERENCES:
R1 E.14 ST. HOME SITES 18-M-56&57
R2 MONUMENTATION MAP I- M-3&6

BENCH MARK

DESCRIPTION: ASSUMED BENCHMARK, MAG NAIL ON STREET, NEAR THE WESTERLY CORNER OF LOT AS SHOWN: ELEV.: 100.00'

ABREVIATIONS

APN	ASSESSOR'S PARCEL NUMBER
BM	BENCH MARK
CATV	CABLE TELEVISION OVERHEAD
D	CURVE DELTA
DRWY	DRIVEWAY
DS	DOWNSPOUT
FF	FINISH FLOOR
FL	FLOW LINE ELEVATION
GFF	GARAGE FINISH FLOOR
IP	IRON PIPE
L	CURVE LENGTH
R#	REFERENCE DOCUMENT
M-M	MONUMENT TO MONUMENT
O.H. PWR	OVERHEAD POWER LINE
O.H. TEL	OVERHEAD TELEPHONE LINE
PCL	PARCEL
P.M.	PARCEL MAP
PTN	PORTION
R	RADIUS
SD	STORM DRAIN
SS	SANITARY SEWER
TC	TOP OF CURB ELEVATION
TEMP.	TEMPORARY
PUE	PUBLIC UTILITY EASEMENT
WLE	WATER LINE EASEMENT

NOTES:

1. DISTANCES AND DIMENSIONS ARE SHOWN IN FEET AND DECIMALS THEREOF.
2. THE DISTINCTIVE BORDER LINE DENOTES THE BOUNDARY.
3. TREES SPECIES NAMES ARE APPROXIMATE, AND LABELED BY THEIR COMMON NAME TO THE BEST OF OUR KNOWLEDGE. IT IS NOT BASED ON AN ARBORIST REPORT.
4. THIS MAPS REPRESENTS TOPOGRAPHY OF THE SURFACE FEATURES ONLY.
5. UNLESS SPECIFIED ON THIS MAP, LOCATIONS OF THE UNDERGROUND AND OVERHEAD UTILITIES ARE NEITHER INTENDED NOR IMPLIED. FOR THE LOCATIONS OF UNDERGROUND UTILITIES CALL "USA" (1-800-642-2440).
6. BUILDING FOOTPRINTS ARE SHOWN AT GROUND LEVEL.
7. FINISH FLOOR ELEVATION TAKEN AT DOOR THRESHOLD (EXTERIOR).
8. A TITLE REPORT FOR THE SUBJECT PROPERTY HAS NOT BEEN EXAMINED BY OSUNA ENGINEERING, INC. OTHER EASEMENTS OF RECORD MAY EXIST THAT ARE NOT SHOWN ON THIS MAP.

REVISIONS	DATE	CITY	BY

PROFESSIONAL LAND SURVEYOR
PORFIRIO OSCAR OSUNA
No. 8921
Exp. 9-30-18
STATE OF CALIFORNIA

PORFIRIO OSCAR OSUNA
PLS 8921 EXP. 9-30-20

OSUNA ENGINEERING INC.
Planning|Surveying|Civil Engineering
CONSULTING CIVIL ENGINEERS & LAND SURVEYORS
117 BERNAL RD. STE. 70-336
SAN JOSE, CA 95119
TEL (408) 772-4381
info@osunaengineering.com

BOUNDARY & TOPOGRAPHIC SURVEY

CENTRAL BLVD, HAYWARD, CA 94542
445-0220-086

HAYWARD CALIFORNIA

Project No.: 1781 | Drawn By: JC & CL | Checked: OO | Date: 2-27-19

SHEET
BT1
OF BT2 SHEETS

LEGEND

- EXISTING CONTOUR LINE
- NATURAL GRADE CONTOUR LINE
- FOUND CITY MONUMENT BOX, OR AS NOTED
- BOUNDARY OF PROPERTY SURVEYED
- RECORD INFORMATION
- CENTERLINE
- CURB INLET
- CURB LINE
- DRIVEWAY APRON
- ELECTROLIER
- FENCE
- FIRE HYDRANT
- FLAT GRATE INLET
- OVERHEAD POWER LINE
- OVERHEAD TELEPHONE LINE
- SANITARY SEWER LINE
- SANITARY SEWER MANHOLE
- SANITARY SEWER CLEANOUT
- SIGN
- STORM DRAIN LINE
- STORM DRAIN MANHOLE
- UTILITY BOX
- UTILITY POLE
- WATER LINE
- WATER METER
- WATER VALVE
- ELECTRIC METER
- WATER HEATER
- GAS

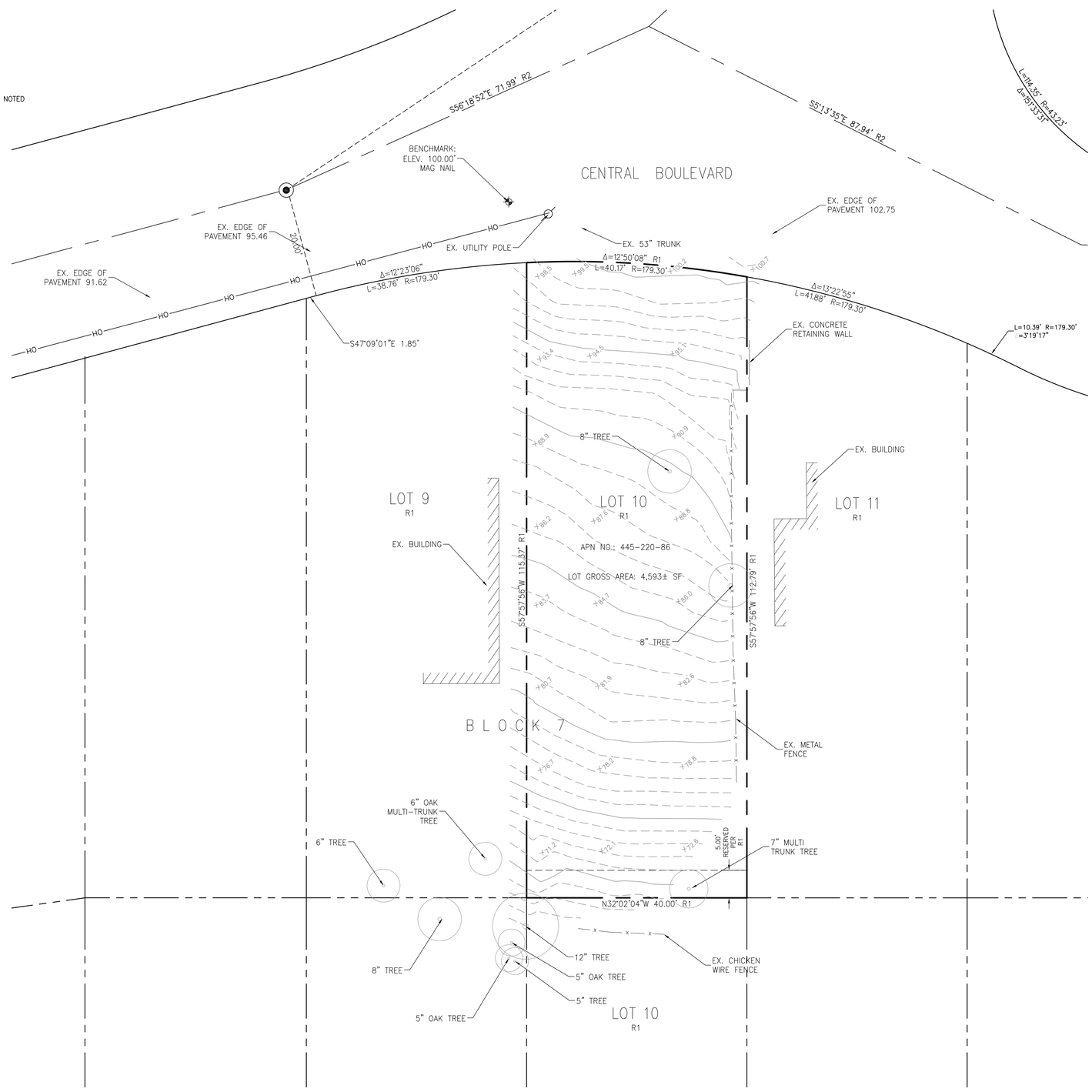

GRAPHIC SCALE
1" = 10'

BASIS OF BEARINGS

THE BEARING NORTH 65°49'02" WEST OF THE MONUMENT LINE OF CENTRAL BOULEVARD AS CALCULATED ON THAT MAP OF MONUMENTATION MAP FILED FOR RECORD IN BOOK I OF MAPS PAGES 3 THROUGH 6, ALAMEDA COUNTY RECORDS, AND AS FOUND MONUMENTED, WAS TAKEN AS THE BASIS OF BEARING FOR THIS SURVEY.

REFERENCES:
R1 E.14 ST. HOME SITES 18-M-56&57
R2 MONUMENTATION MAP I- M-3&6

BENCH MARK

DESCRIPTION: ASSUMED BENCHMARK, MAG NAIL ON STREET, NEAR THE WESTERLY CORNER OF LOT AS SHOWN: ELEV.: 100.00'

ABREVIATIONS

APN	ASSESSOR'S PARCEL NUMBER
BM	BENCH MARK
CATV	CABLE TELEVISION OVERHEAD
D	CURVE DELTA
DRWY	DRIVEWAY
DS	DOWNSPOUT
FF	FINISH FLOOR
FL	FLOW LINE ELEVATION
GFF	GARAGE FINISH FLOOR
IP	IRON PIPE
L	CURVE LENGTH
R#	REFERENCE DOCUMENT
M-M	MONUMENT TO MONUMENT
O.H. PWR	OVERHEAD POWER LINE
O.H. TEL	OVERHEAD TELEPHONE LINE
PCL	PARCEL
P.M.	PARCEL MAP
PTN	PORTION
R	RADIUS
SD	STORM DRAIN
SS	SANITARY SEWER
TC	TOP OF CURB ELEVATION
TEMP.	TEMPORARY
PUE	PUBLIC UTILITY EASEMENT
WLE	WATER LINE EASEMENT

NOTES:

1. DISTANCES AND DIMENSIONS ARE SHOWN IN FEET AND DECIMALS THEREOF.
2. THE DISTINCTIVE BORDER LINE DENOTES THE BOUNDARY.
3. TREES SPECIES NAMES ARE APPROXIMATE, AND LABELED BY THEIR COMMON NAME TO THE BEST OF OUR KNOWLEDGE. IT IS NOT BASED ON AN ARBORIST REPORT.
4. THIS MAPS REPRESENTS TOPOGRAPHY OF THE SURFACE FEATURES ONLY.
5. UNLESS SPECIFIED ON THIS MAP, LOCATIONS OF THE UNDERGROUND AND OVERHEAD UTILITIES ARE NEITHER INTENDED NOR IMPLIED. FOR THE LOCATIONS OF UNDERGROUND UTILITIES CALL "USA" (1-800-642-2440).
6. BUILDING FOOTPRINTS ARE SHOWN AT GROUND LEVEL.
7. FINISH FLOOR ELEVATION TAKEN AT DOOR THRESHOLD (EXTERIOR).
8. A TITLE REPORT FOR THE SUBJECT PROPERTY HAS NOT BEEN EXAMINED BY OSUNA ENGINEERING, INC. OTHER EASEMENTS OF RECORD MAY EXIST THAT ARE NOT SHOWN ON THIS MAP.

BY	CITY	DATE	REVISIONS

PROFESSIONAL LAND SURVEYOR
PORFIRIO OSCAR OSUNA
No. 8921
Exp. 9-30-18
STATE OF CALIFORNIA

PORFIRIO OSCAR OSUNA
PLS 8921 EXP. 9-30-20

OSUNA ENGINEERING INC.
Planning | Surveying | Civil Engineering
CONSULTING CIVIL ENGINEERS & LAND SURVEYORS
117 BERNAL RD. STE. 70-336 SAN JOSE, CA 95119
TEL. (408) 772-4381
Info@osunaengineering.com

BOUNDARY & TOPOGRAPHIC SURVEY

CENTRAL BLVD, HAYWARD, CA 94542
445-0220-086

HAYWARD CALIFORNIA
Project No.: 1781 | Drawn By: JC & CL | Checked: OO | Date: 2-27-19

SHEET
BT2
OF BT2 SHEETS

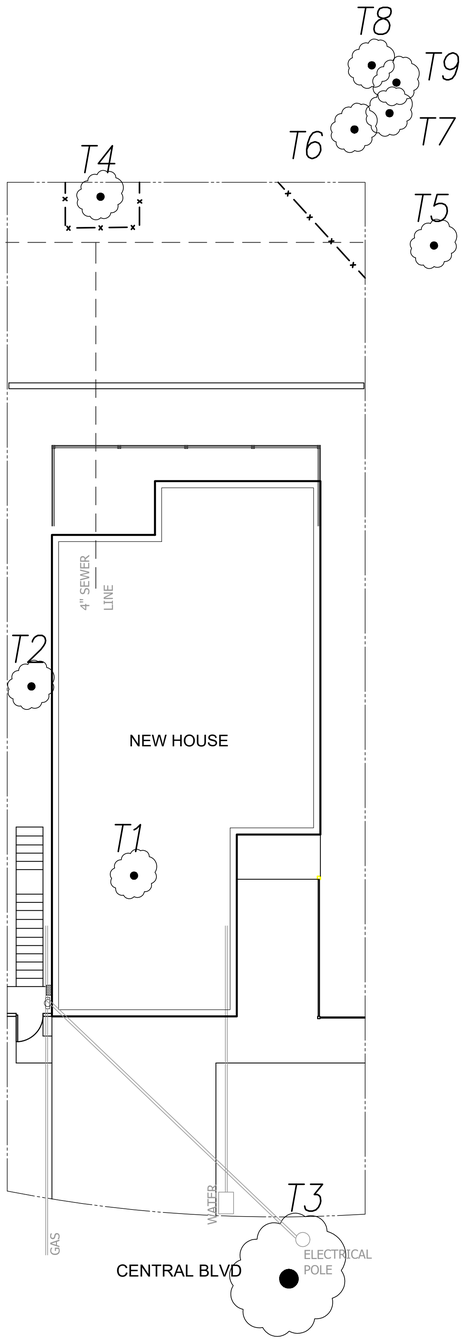

TREE CHART

TREE NUMBER	TRUNK DIAMETER(S)	TO BE REMOVED	TREE TYPE	APPRAISED VALUE
T1	7.6	Y	PRUNUS DULCIS	$0
T2	8.0	Y	SALIX LAEVIGATA	$290
T3	53.0	Y	SCHINUS MOLLE	$0
T4	10–8–5–5–4	N	PRUNUS DULCIS	$2,050
T5	15.0	N	QUERCUS AGRIFOLIA	N/A
T6	12.0	N	QUERCUS AGRIFOLIA	N/A
T7	8.0	N	QUERCUS AGRIFOLIA	N/A
T8	8.0	N	QUERCUS AGRIFOLIA	N/A
T9	8.0	N	QUERCUS AGRIFOLIA	N/A
			TOTAL	$2,340

TREES 5 – 9 ARE ON ADJACENT PROPERTY AND SHALL REMAIN

TREES TO BE REMOVED: 3

TOTAL APPRAISED VALUE OF ALL EXISTING TREES ONSITE = $2,340
APPRAISED VALUE OF ALL TREES BEING REMOVED = $290

MITIGATION CALCULATION

36" BOX QUERCUS AGRIFOLIA: 1 @ $395 PER = $395

TOTAL: $395

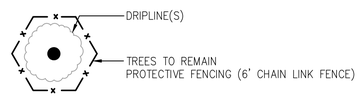

TREE PROTECTION DETAIL

SCALE: 1"=10'

SCALE: 1" = 8'
0 4 8 12 16

REVISIONS	BY
5/22/20	JW

UTOPIAN LANDSCAPES
LANDSCAPE ARCHITECTURE AND DESIGN SERVICES
2029 Paloma Avenue
Stockton, CA 95209
(209) 954-9065 Office
(209) 320-0707 Fax
www.utopianlandscapes.net

REGISTERED LANDSCAPE ARCHITECT
Lic. No. 5015
Justin N. Vera
Signature
2/28/22
Expiration Date
Date
STATE OF CALIFORNIA

EXISTING TREE PLAN
SHEET TITLE

Diaz Residence
25183 Central Blvd
Hayward, CA
PROJECT

DATE	2/12/20
SCALE	1"=8'
DRAWN	JW
SHEET	L1
OF 5 SHEETS	

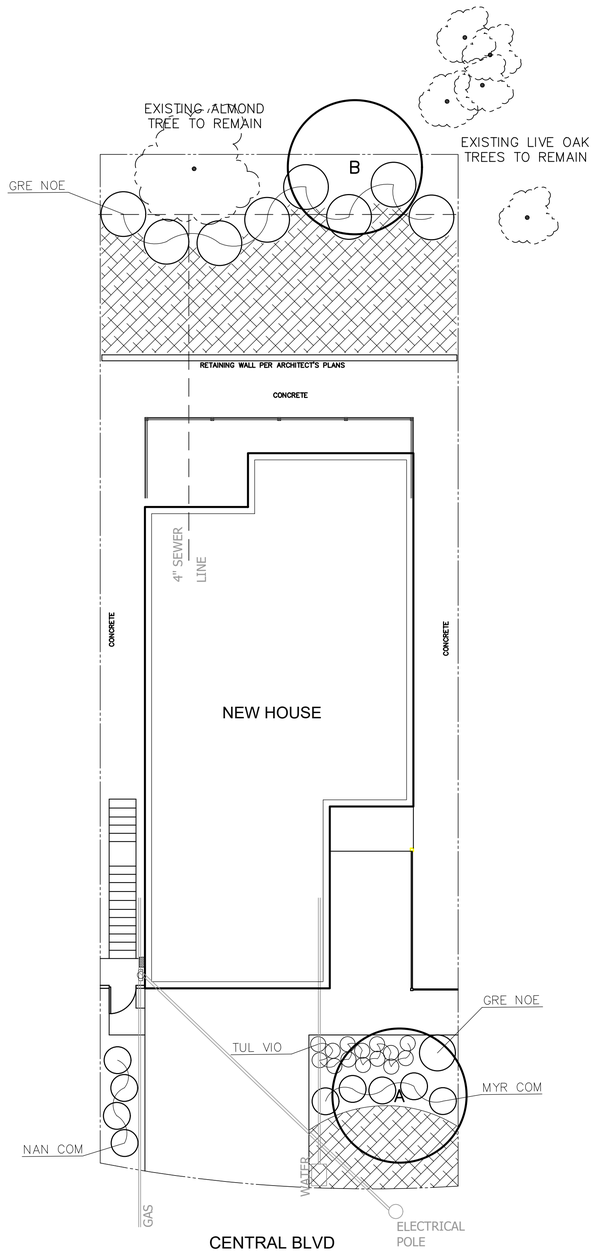

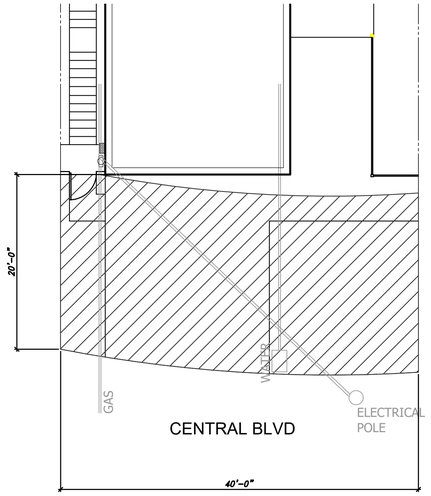

REQUIRED FRONT YARD LANDSCAPE AREA
40x20=800 SQUARE FEET
INDICATED BY HATCH

50%=400 MAXIMUM SQUARE FEET OF PAVING ALLOWED

DRIVEWAY SQUARE FOOTAGE WITHIN REQUIRED LANDSCAPE AREA = 370 SQUARE FEET

PLANT LIST

Symbol	Size	Botanical Name	Common Name	WUCOLS Water Factor North Central/ Coastal Region	Size Height x Spread
TREES					
A	15 gal.	Pistacia Chinensis	Chinese Pistache	Low	35'x30'
B	36" Box	Quercus Agrifolia	Coast Live Oak	Very Low	60'x35'
SHRUBS					
GRE NOE	5 gal.	Grevillea Noellii	Grevellia	Low	4'x4'
MYR COM	5 gal.	Myrtus c. 'Compacta'	Dwarf Myrtle	Low	3'x3'
NAN COM	5 gal.	Nandina d. 'Compacta'	Compact Heavenly Bamboo	Low	3'x2'
TUL VIO	1 gal.	Tulbaghia Violacea	Society Garlic	Low	2'x2'
GROUNDCOVERS & ACCENTS					
	1 gal @ 60" O.C.	Arctostaphylos uva-ursi 'Point Reyes'	Point Reyes Bearberry	Low	1'x6'

2x4 Plastic Header Board Shall be Installed at All Ground Cover Edges That Don't Abut Concrete

PLANT SPACING SHOWN IN LANDSCAPE PLAN IS BASED ON PLANT SIZES OBTAINED FROM THE SUNSET WESTERN GARDEN BOOK AS WELL AS SAN MARCOS GROWERS

PLANTING NOTES

1. ALL WORK SHALL BE COMPLETED IN ACCORDANCE WITH THE LOCAL CODES AND ORDINANCES WHICH APPLY TO THE CITY OF HAYWARD.
2. THE LANDSCAPE CONTRACTOR SHALL INSPECT THE SITE AND BE FAMILIAR WITH ALL EXISTING SITE CONDITIONS PRIOR TO SUBMITTING A BID. THE LANDSCAPE CONTRACTOR SHALL REVIEW RELATED DRAWINGS AND SHALL ENSURE COORDINATION WITH ALL APPLICABLE TRADES PRIOR TO SUBMITTING A BID.
3. CONTRACTOR SHALL RECEIVE SITE GRADED TO +/- .1 FT. THE CONTRACTOR IS RESPONSIBLE FOR SURFACE DRAINAGE OF ALL PLANTING AREAS.NO LOW SPOTS WHICH HOLD STANDING WATER WILL BE ACCEPTED.
4. CONTRACTOR WILL, FOR BID PURPOSES ONLY, SPREAD 3" OF ORGANIC COMPOST OVER THE ENTIRE SITE AND ROTOTILL THOROUGHLY INTO THE TOP 9" OF SOIL. THE CONTRACTOR SHALL OBTAIN A SOILS REPORT FOR ACTUAL SOIL AMENDMENTS. SOILS TEST MUST MAKE RECOMMENDATIONS BASED ON ORGANIC COMPOSTS ONLY. ALL PLANT FERTILIZERS SHALL BE OMRI CERTIFIED. CONTRACTOR SHALL SUPPLY DELIVERY TAGS FOR AMENDMENTS AS PROOF OF INSTALLATION PRIOR TO ISSUANCE OF AN OCCUPANCY PERMIT.
5. AFTER INSTALLATION OF THE IRRIGATION SYSTEM, ALL PLANTING AREAS SHALL BE RAKED SMOOTH AND ALL ROCKS AND PEBBLES OVER 1" IN DIAMETER REMOVED FROM THE SITE.
6. SUPPLY 21G AGRIFORM TABLETS AS FOLLOWS: 1-1G, 2-5G 4-15G 8-24"BOX 16-48" BOX
7. DIG PLANTING PITS TWO TIMES THE HEIGHT AND WIDTH OF THE ROOT BALL. BACKFILL PITS WITH 1/3 SOIL CONDITIONER AND 2/3 EXISTING SOIL, PLANT PITS ARE ALSO TO RECEIVE AMENDMENTS PER SOILS TEST RESULTS.
8. STAKE ALL TREES PER CITY STANDARD DETAIL ON DETAIL SHEET.
9. ALL PLANTING AREAS SHALL RECEIVE 3" LAYER OF WALK ON BARK AFTER ALL TREES, SHRUBS, AND GROUNDCOVERS HAVE BEEN PLANTED. BARK MULCH SHALL BE ORGANIC RECYCLED CHIPPED WOOD IN DARK BROWN COLOR OF A SIZE LESS THAN ONE INCH DIAMETER.
10. PLANT AT THE SPACING SHOWN. AFTER THE SITE IS PLANTED, A PRE-EMERGENT SHALL BE APPLIED TO ALL PLANTING AREAS AS PER MANUFACTURER'S RECOMMENDATIONS. THE LANDSCAPE CONTRACTOR SHALL ASSUME RESPONSIBILITY FOR THE USE OF CHEMICAL PRODUCTS AND IS TO SUPPLY THE OWNER WITH A WRITTEN RECORD OF THE TYPE OF CHEMICAL USED, DATE APPLIED AND RATE OF APPLICATION.
11. BACK YARD SLOPE SHALL BE COVERED WITH EROSION CONTROL FABRIC PRIOR TO PLANTING.
12. CONTRACTOR SHALL ENSURE SUBMITTAL OF THE CERTIFICATES OF COMPLETION AND INSTALLATION AND ALL RELATED DOCUMENTS (IRRIGATION SCHEDULING, SCHEDULE OF LANDSCAPE AND IRRIGATION MAINTENANCE, LANDSCAPE IRRIGATION AUDIT REPORT, AND SOIL MANAGEMENT REPORT) UPON COMPLETION OF CONSTRUCTION, PRIOR TO PROJECT ACCEPTANCE.

COMPLIANCE STATEMENT:

I HAVE COMPLIED WITH THE CRITERIA OF THE CITY OF HAYWARD BAY FRIENDLY WATER EFFICIENT LANDSCAPE ORDINANCE AND APPLIED THEM FOR THE EFFICIENT USE OF WATER IN THE LANDSCAPE AND IRRIGATION DESIGN PLAN.

5/22/20

JUSTIN WARE: CALIFORNIA REGISTERED LANDSCAPE ARCHITECT #5033 — DATE

SCALE: 1" = 8'
0 4 8 12 16

REVISIONS	BY
5/22/20	JW

UTOPIAN LANDSCAPES
LANDSCAPE ARCHITECTURE AND DESIGN SERVICES
2029 Paloma Avenue
Stockton, CA 95209
(209) 954-9065 Office
(209) 320-0707 Fax
www.utopianlandscapes.net

REGISTERED LANDSCAPE ARCHITECT
No. 5033
Justin N. Ware
Signature
5/22/22
Expiration Date
Date
STATE OF CALIFORNIA

LANDSCAPE PLAN
SHEET TITLE

Diaz Residence
25183 Central Blvd
Hayward, CA
PROJECT

DATE	2/12/20
SCALE	1"=8'
DRAWN	JW
SHEET	L2
OF 5 SHEETS	

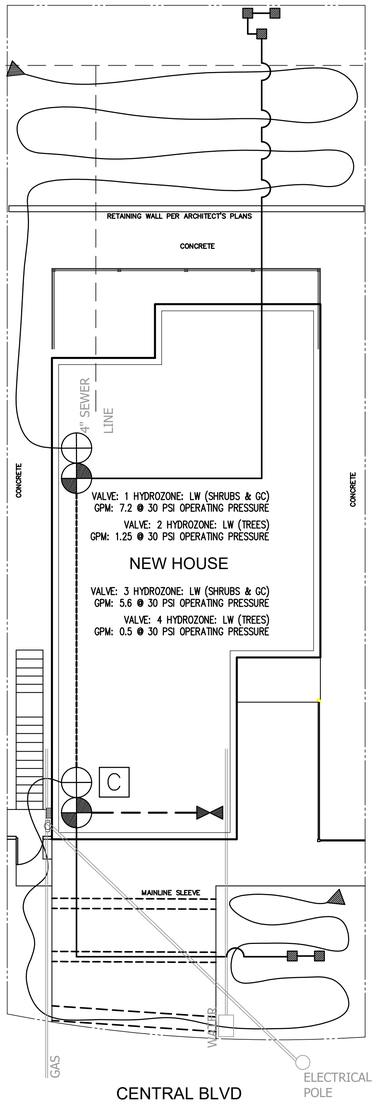

IRRIGATION LEGEND

- RAINBIRD RWS-M-B-C-1401 ROOT WATERING ASSEMBLY
- PEPCO 640EC END CAP
- RAINBIRD 075-ASVF, 3/4" ANTI-SIPHON VALVE
- RAINBIRD 075-ASVF, 3/4" ANTI-SIPHON VALVE WITH IRRIDELCO PR-30 PRESSURE REGULATOR AND PEPCO PFPV 64 FILTER
- NIBCO T-580, 1-1/4" BALL VALVE
- C — RAINBIRD ESP-TM2-4-120V CONTROLLER WITH WITH RAINBIRD RSD-BEx RAIN SENSOR
- SCH. 40 PVC SLEEVE, TWICE THE SIZE OF THE PIPE
- SCH. 40 PVC MAINLINE, 1" (W/ 18" COVER)
- CL 200 PVC LATERAL LINE, 3/4" (W/ 12" COVER)
- PEPCO P700, 1/2" DRIP TUBING W/ EMITTERS (W/ 4" COVER)

IRRIGATION NOTES

1. ALL WORK SHALL BE COMPLETED IN ACCORDANCE WITH THE LOCAL CODES AND ORDINANCES WHICH APPLY TO THE CITY OF HAYWARD.
2. THE IRRIGATION CONTRACTOR SHALL INSPECT THE SITE AND BE FAMILIAR WITH ALL EXISTING SITE CONDITIONS PRIOR TO SUBMITTING A BID. THE IRRIGATION CONTRACTOR SHALL REVIEW RELATED DRAWINGS AND SHALL ENSURE COORDINATION WITH ALL APPLICABLE TRADES PRIOR TO SUBMITTING A BID. THE IRRIGATION CONTRACTOR SHALL COORDINATE HIS WORK WITH THE GENERAL CONTRACTOR AND OTHER SUBCONTRACTORS FOR THE LOCATION AND THE INSTALLATION OF SLEEVES THROUGH WALLS, UNDER ROADWAYS, PAVING, STRUCTURES, ETC.
3. THIS PLAN IS DIAGRAMMATIC. ALL PIPING, VALVES, ETC. SHOWN WITHIN PAVED AREAS IS FOR DESIGN CLARIFICATION ONLY AND SHALL BE INSTALLED IN PLANTING AREAS WHERE POSSIBLE. AVOID ANY CONFLICTS BETWEEN THE SPRINKLER SYSTEM, AND PLANTING AND ARCHITECTURAL FEATURES.
4. DO NOT WILLFULLY INSTALL THE SPRINKLER SYSTEM AS SHOWN ON THE DRAWINGS WHEN IT IS OBVIOUS IN THE FIELD THAT OBSTRUCTIONS AND GRADE DIFFERENCES IN THE AREA EXIST THAT MIGHT NOT HAVE BEEN CONSIDERED IN THE ENGINEERING. SUCH OBSTRUCTIONS OR DIFFERENCES SHOULD BE BROUGHT TO THE ATTENTION OF THE OWNER'S AUTHORIZED REPRESENTATIVE. IN THE EVENT THAT THIS NOTIFICATION IS NOT PERFORMED, THE IRRIGATION CONTRACTOR SHALL ASSUME FULL RESPONSIBILITY FOR ANY REVISIONS NECESSARY.
5. THE SPRINKLER SYSTEM IS DESIGNED TO OPERATE AT A MINIMUM OF 30 PSI. THE IRRIGATION CONTRACTOR IS TO PERFORM A STATIC AND DYNAMIC PRESSURE TEST; VERIFY AT LEAST 50 PSI STATIC AND RECORD THE PRESSURE READING AT 14 GPM. REPORT FINDINGS TO LANDSCAPE ARCHITECT. IN THE EVENT THAT THIS NOTIFICATION IS NOT PERFORMED, THE IRRIGATION CONTRACTOR SHALL ASSUME FULL RESPONSIBILITY FOR ANY REVISIONS NECESSARY.
6. PRIOR TO TRENCHING, CALL UNDERGROUND SERVICE ALERT AT: 1-800-642-2444.
7. INSTALL DRIP EMITTERS AT THE FOLLOWING RATES: (1) PER 1 GALLON SHRUB, (2) PORTS PER 5 GALLON SHRUB,
8. NOTIFY THE LANDSCAPE ARCHITECT OF ANY ASPECTS OF LAYOUT WHICH WILL PROVIDE INCOMPLETE OR INSUFFICIENT WATER COVERAGE OF PLANT MATERIAL. DO NOT PROCEED UNTIL THE LANDSCAPE ARCHITECTS INSTRUCTIONS ARE OBTAINED.
9. LOCATE ALL BUBBLERS ON UPHILL SIDE OF TREES AND SHRUBS.
10. THREAD SEALANT SHALL BE NON-HARDENING AND COMPATIBLE WITH PIPE. ALL PVC WELDS SHALL BE CUT SQUARE AND PRIMER SHALL BE USED.

WATER USE CALCULATION

MAWA = (44.2)(0.62)(0.55 X 1,280)

MAWA = 19,292.42 GALLONS PER YEAR

ESTIMATED TOTAL WATER USE

REFERENCE EVAPOTRANSPIRATION (ETo): 44.2

HYDROZONE	PLANT FACTOR (PF)	IRRIGATION METHOD	IRRIGATION EFFICIENCY (IE)	ETAF (PF/IE)	LANDSCAPE AREA (SF)	ETAF X AREA	ESTIMATED TOTAL WATER USE (ETWU)
LOW: TREES	0.2	DRIP	0.81	0.2469	24	5.93	162.51
LOW: SHRUBS & GROUNDCOVER	0.2	DRIP	0.81	0.2469	1,256	310.11	8,498.25
				TOTALS:	1,280	316.04	8,660.76

HYDROZONE INFORMATION TABLE

HYDROZONE	VALVES	IRRIGATION METHOD	AREA	% OF LANDSCAPE AREA
LOW (TREES)	2,4	DRIP	24 SF	1.88
LOW (SHRUBS & GC)	1,3	DRIP	1,256 SF	98.12

TOTAL: 1,280 SF

NOTE: 1,280 SF OF LANDSCAPE AREA NOTED ABOVE AND USED IN CALCULATIONS ABOVE REPRESENTS ALL LANDSCAPE AREA AT A NEWLY DEVELOPED SITE

COMPLIANCE STATEMENT:

I HAVE COMPLIED WITH THE CRITERIA OF THE CITY OF HAYWARD BAY FRIENDLY WATER EFFICIENT LANDSCAPE ORDINANCE AND APPLIED THEM FOR THE EFFICIENT USE OF WATER IN THE LANDSCAPE AND IRRIGATION DESIGN PLAN.

5/22/20

JUSTIN WARE: CALIFORNIA REGISTERED LANDSCAPE ARCHITECT #5033 — DATE

SCALE: 1" = 8'
4 12
0 8 16

REVISIONS	BY
5/22/20	JW

UTOPIAN LANDSCAPES
LANDSCAPE ARCHITECTURE AND DESIGN SERVICES
2029 Paloma Avenue
Stockton, CA 95209
(209) 954-9065 Office
(209) 320-0707 Fax
www.utopianlandscapes.net

REGISTERED LANDSCAPE ARCHITECT
No. 5033
Justin N. Ware
Signature
2/28/22
Expiration Date
Date
STATE OF CALIFORNIA

IRRIGATION PLAN
SHEET TITLE

Diaz Residence
25183 Central Blvd
Hayward, CA
PROJECT

DATE	2/12/20
SCALE	1"=8'
DRAWN	JW
SHEET	L3
OF 5 SHEETS	

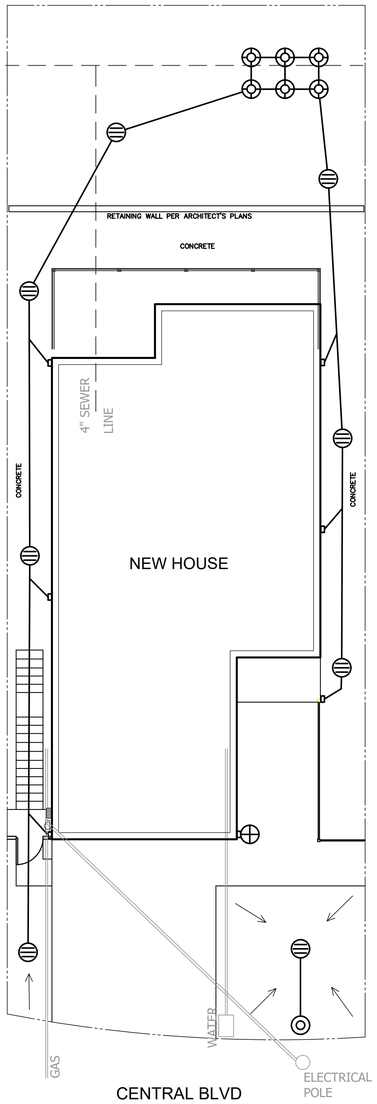

DRAINAGE LEGEND

- RTS HOME ACCENTS 50-GALLON RAIN WATER COLLECTION BARREL WITH BRASS SPIGOT
- 6" NDS 101 & 201 SPEE-D CATCH BASINS W/ATRIUM GRATE
- NDS FWAS24WH DRY WELL SYSTEM WITH FWBP24 BOTTOM AND FWFF67 FABRIC WRAP
- NDS 321 POP UP EMITTER ASSEMBLY
- 3" STYRENE DRAIN PIPE
- DOWNSPOUT ADAPTER
- DIRECTION OF SURFACE FLOW

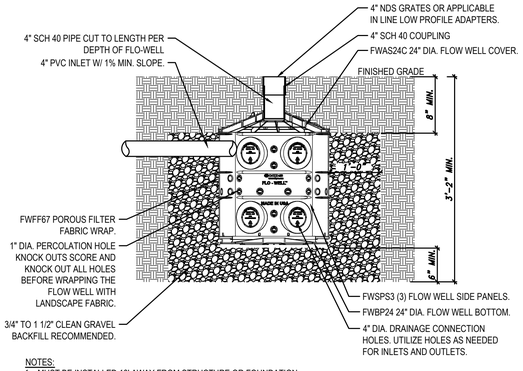

NOTES:
1. MUST BE INSTALLED 10' AWAY FROM STRUCTURE OR FOUNDATION.
2. FWAS24 KIT DOES NOT COME WITH FWPB24 BTM.
3. REFERENCE FLO-WELL CALCULATOR ON NDSPRO.COM
4. INSTALLATION TO BE COMPLETED IN ACCORDANCE WITH MANUFACTURER'S SPECIFICATIONS.

FLO-WELL DRY WELL SYSTEM

NOT TO SCALE

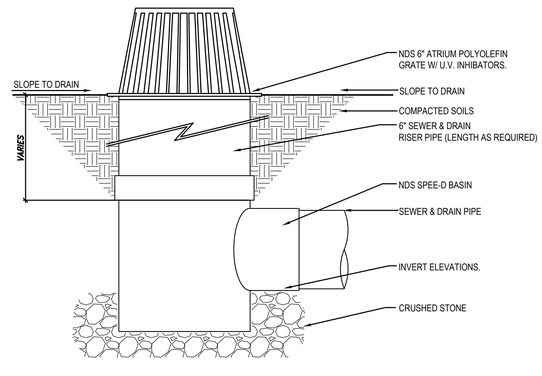

SECTION

NOTES:
1. INSTALLATION TO BE COMPLETED IN ACCORDANCE WITH MANUFACTURER'S SPECIFICATIONS.

ROUND SPEE-D BASIN MODEL 101

NOT TO SCALE

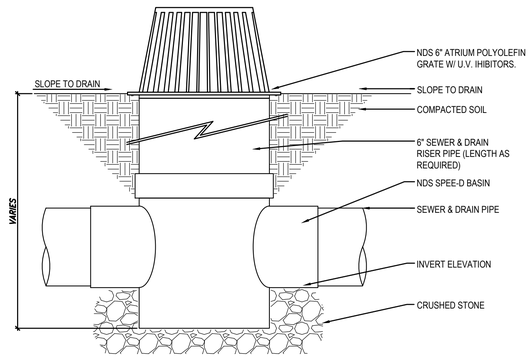

SECTION

NOTES:
1. INSTALLATION TO BE COMPLETED IN ACCORDANCE WITH MANUFACTURER'S SPECIFICATIONS.

ROUND SPEE-D BASIN MODEL 201

NOT TO SCALE

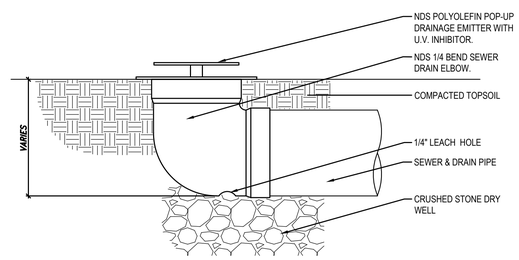

SECTION

NOTES:
1. INSTALLATION TO BE COMPLETED IN ACCORDANCE WITH MANUFACTURER'S SPECIFICATIONS.

POP UP DRAINAGE EMITTER

NOT TO SCALE

SCALE: 1" = 8'
0 4 8 12 16

REVISIONS	BY
5/22/20	JW

UTOPIAN LANDSCAPES
LANDSCAPE ARCHITECTURE AND DESIGN SERVICES
2029 Paloma Avenue
Stockton, CA 95209
(209) 954-9065 Office
(209) 320-0707 Fax
www.utopianlandscapes.net

REGISTERED LANDSCAPE ARCHITECT
No. 5032
Justin N. Ware
Signature
2/28/22
Expiration Date
Date
STATE OF CALIFORNIA

DRAINAGE PLAN

SHEET TITLE

Diaz Residence
25183 Central Blvd
Hayward, CA

PROJECT

DATE	2/12/20
SCALE	1"=8'
DRAWN	JW
SHEET	L4
OF 5 SHEETS	

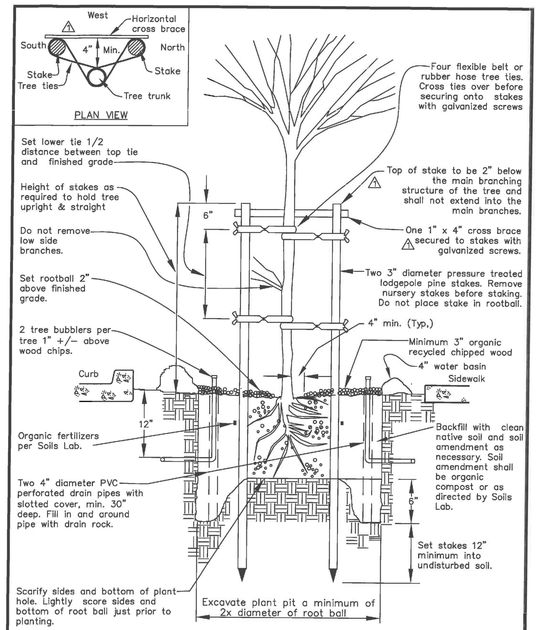

TREE STAKING
15 GALLON OR 24" BOX TREE

REV	DATE	BY		
1	6/23/11	AL	CITY OF HAYWARD PUBLIC WORKS DEPT. DRAWN BY: HGM DATE: 05/23/08 CHECKED BY: MK DATE: 7/08 APPD. BY CITY ENGINEER / DIR. PUBLIC WORKS	STANDARD STREET TREE PLANTING

DWG. NO. SD-122
FILED
SHT. 1 OF 2

STREET TREE PLANTING SPECIFICATIONS:

1. Tree shall be healthy, disease and insect–free, well rooted, and properly trained with a straight trunk that can stand upright without support. Tree shall exhibit a central leader, or a main branch that can be trained as a central leader. Branches shall be well–developed and shall be evenly and radially distributed around the trunk. Root ball shalll not exhibit kinked or circling roots.
2. Tree shall comply with federal and state laws requiring inspection for plant diseases and pest infestation. Clearance from the county agricultural commissioner, as required by law, shall be obtained before planting trees delivered from outside the county.
3. Prior to planting tree, determine the location of existing or future underground utilities. Locate tree a minimum of 5 feet from lateral service lines and driveways. Locate tree a minimum of 15 feet from a light pole, and a minimum of 30 feet from the face of a traffic signal, or as otherwise specified by the City.
4. Tree pit shall be tested for proper drainage prior to planting tree. Fill pit with water; if water remains after a 24–hour period, auger three 4"–diameter by 3–foot deep holes at the bottom of the tree pit. Backfill with drain rock.
5. Set tree in an upright and plumb position. As much as possible, tree shall be positioned such that dominant branches are parallel to the roadway and are oriented away from potential conflicts.
6. If required by the City, a pressure–compensating bubbler, or drip emitters, shall be provided to each tree.
7. Depending on the planter strip width, or the tree well size and the tree species being planted, a 24" deep root–barrier may be required by the City to be placed between the root–ball and the curb and/or sidewalk. Length of strip barrier or size of the box barrier will be specified by the City.
8. Stakes are to be removed when the tree diameter meets or exceeds the diameter of the stake.

REV	DATE	BY		
			CITY OF HAYWARD PUBLIC WORKS DEPT. DRAWN BY: JT DATE: 05/13/08 CHECKED BY: MHW DATE: 7/08 APPD. BY CITY ENGINEER / DIR. PUBLIC WORKS	STANDARD STREET TREE PLANTING

DWG. NO. SD-122
FILED
SHT. 2 OF 2

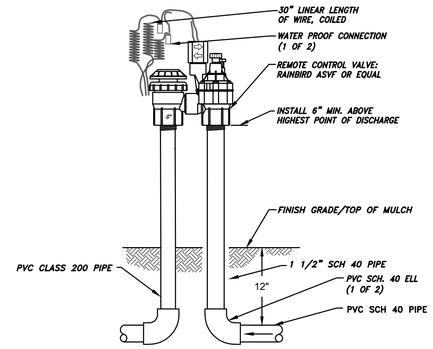

ANTI SIPHON VALVE-TREES
NOT TO SCALE

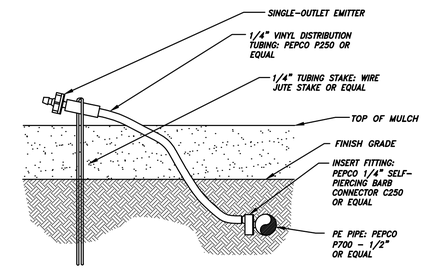

DRIP EMITTER AND TUBING
NOT TO SCALE

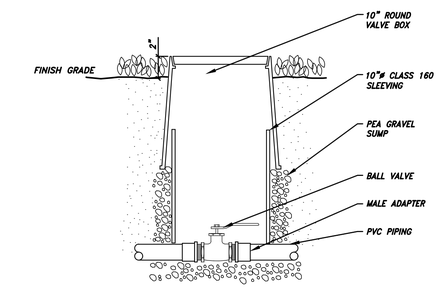

BALL VALVE

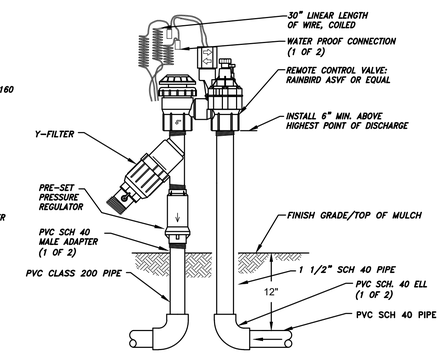

ANTI SIPHON VALVE-DRIP
NOT TO SCALE

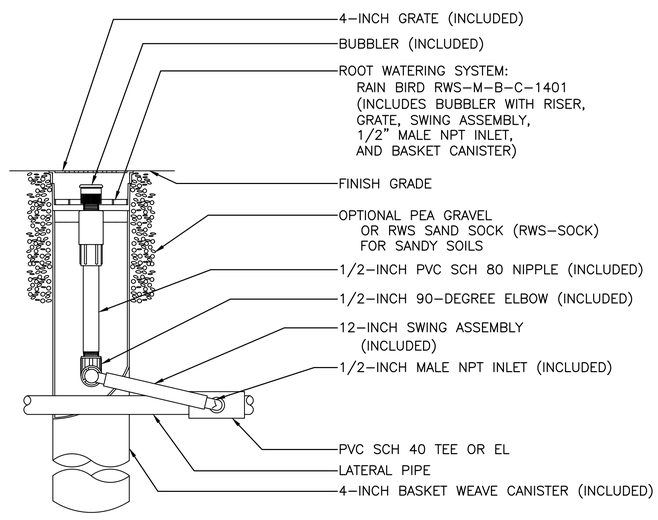

TREE BUBBLER - RWS-M-B-C-1401
NOT TO SCALE

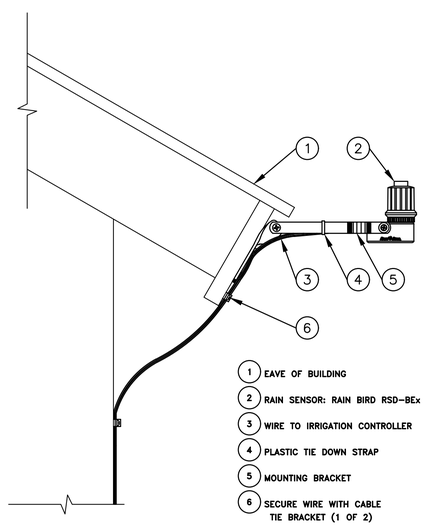

RSD-BEx RAIN SENSOR
NOT TO SCALE

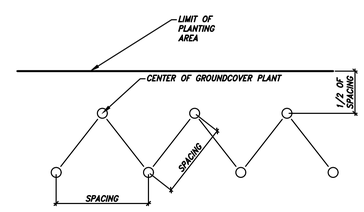

GROUNDCOVER SPACING
NOT TO SCALE

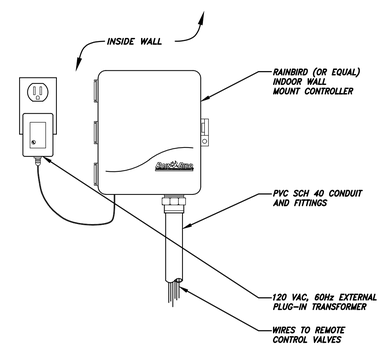

INTERIOR CONTROLLER
NOT TO SCALE

REVISIONS	BY
5/22/20	JW

UTOPIAN LANDSCAPES
LANDSCAPE ARCHITECTURE AND DESIGN SERVICES
2029 Paloma Avenue
Stockton, CA 95209
(209) 954-9065 Office
(209) 320-0707 Fax
www.utopianlandscapes.net

REGISTERED LANDSCAPE ARCHITECT
No. 5033
Justin N. Ware
Signature
2/28/22
Expiration Date
Date
STATE OF CALIFORNIA

DETAILS
SHEET TITLE

Diaz Residence
25183 Central Blvd
Hayward, CA
PROJECT

DATE	2/12/20
SCALE	NONE
DRAWN	JW
SHEET	L5
OF 5 SHEETS	